YAMAHA

GENUINE
PARTS CATALOGUE
MOTORCYCLE

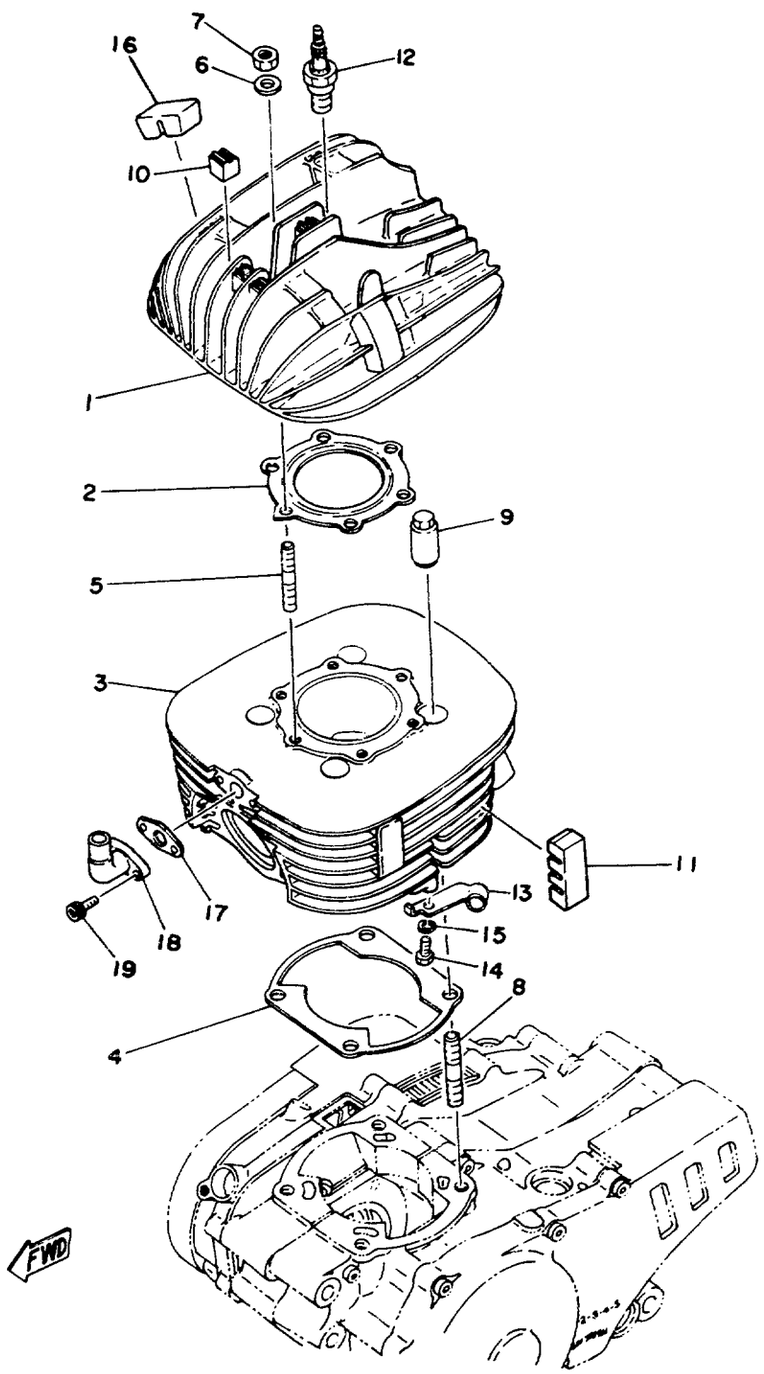

MODEL – IBM I.D. NUMBER	DT250F 2N6
Bore/Stroke/Number Cylingers/Displacement (cc)	70mm / 64mm / 1 / 246
Compression Ratio/Compression Pressure min~max	10.2:1 (corrected 8.7:1) / 12.0 ~ 13.0 kg/cm²

CYLINDER HEAD - CYLINDER

Ref. No.	Part Number	Description	Qty	Remarks
1	(2N6-11111-00-00)	HEAD, CYLINDER 1	1	
2	434-11181-00-00	GASKET, CYLINDER HEAD 1	1	
3	(2N6-11311-00-00)	CYLINDER 1	1	
4	1M1-11351-00-00	GASKET, CYLINDER	1	
5	90116-08104-00	BOLT, STUD	6	
6	90201-08100-00	WASHER, PLATE	6	
7	95333-08600-00	NUT	6	
8	90116-10263-00	BOLT, STUD	4	
9	90179-10201-00	NUT	4	
10	363-11161-00-00	ABSORBER 1 (363-11161-00)	4	
11	2N6-11127-00-00	ABSORBER 3	4	
12	NGK-B8ES0-00-00	NGK B8ES 10PK	1	
13	1M1-15441-00-00	HOLDER, CLCH CABLE	1	
14	97011-06016-00	BOLT	1	
15	92995-06100-00	WASHER, SPRING	1	
16	(2N6-11161-00-00)	ABSORBER 1	2	
17	2N6-11354-00-00	GASKET	1	
18	(2N6-11353-00-00)	JOINT	1	
19	91316-06018-00	BOLT, SOCKET HEAD	2	

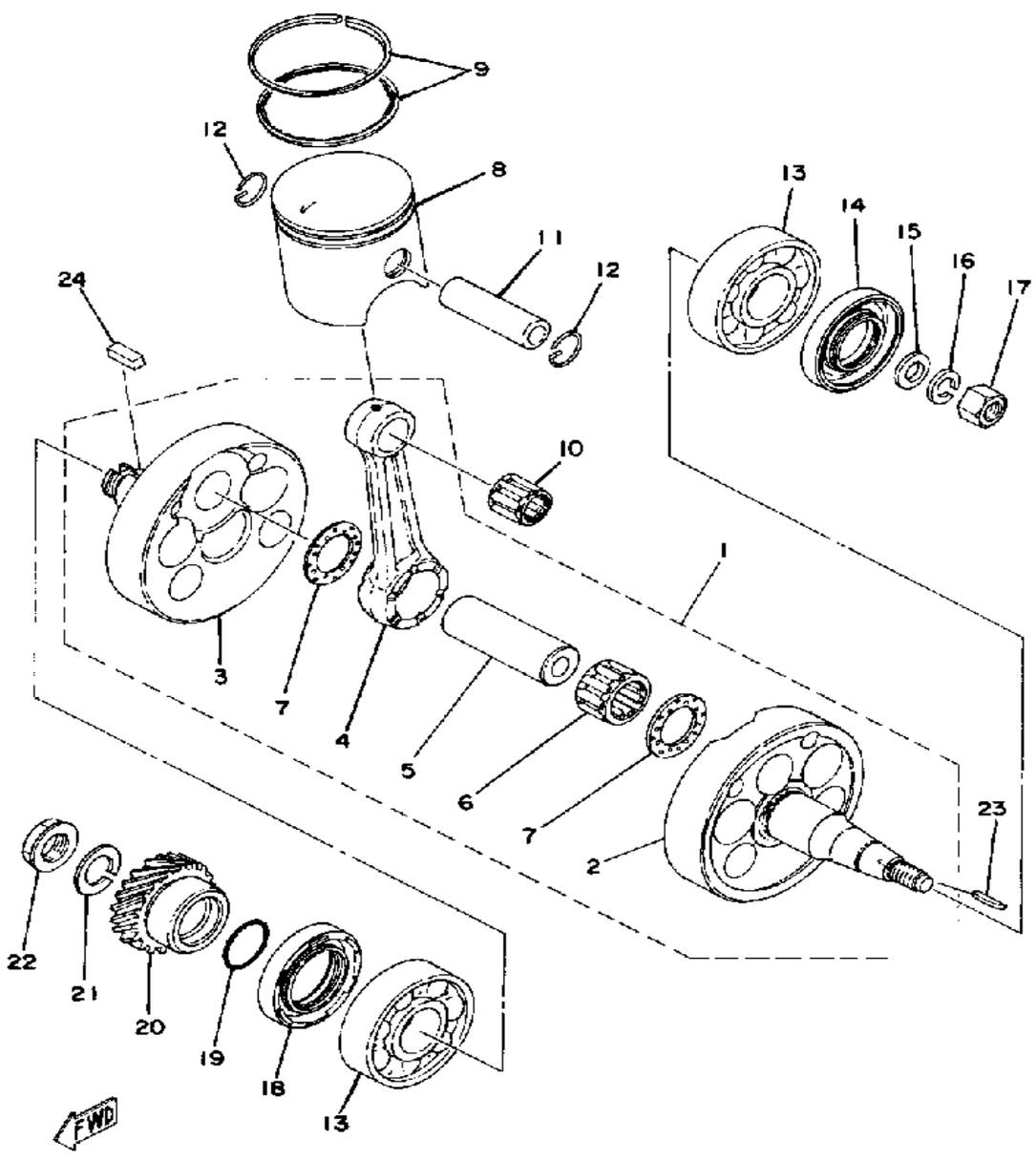

Piston Skirt Clearance new/max.	0.040 ~ 0.046mm / 0.1mm
Ring End Gap Top/2nd/3rd	0.2 ~ 0.4mm / 0.2 ~ 0.4mm / ϕ

CRANKSHAFT - PISTON

Ref. No.	Part Number	Description	Qty	Remarks
1	(2N6-11400-00-00)	CRANKSHAFT ASSEMBLY . . .	1	
2	(2N6-11412-00-00)	CRANK 1	1	
3	2N7-14185-00-00	. FLOAT	1	
4	498-11651-00-00	. ROD, CONNECTING	1	
5	2X4-11681-00-00	. PIN, CRANK 1	1	
6	93310-425N4-00	. BEARING, CYLINDRICAL . . .	1	
7	90209-25085-00	. WASHER, (90209-25220)	2	
8	(2N6-11630-20-00)	PISTON KIT 2ND	1	ALTERNATE PART
	(2N6-11630-40-00)	PISTON KIT 4TH	1	ALTERNATE PART
	(2N6-11631-00-96)	PISTON STD	1	
	(2N6-11637-00-00)	PISTON 3 O/S 0. 5	1	ALTERNATE PART
	(2N6-11638-00-00)	PISTON 4 O/S 1. 0	1	ALTERNATE PART
	2N6-11630-00-00	PISTON KIT STD	1	ALTERNATE PART
	2N6-11630-30-00	PISTON KIT 3RD	1	ALTERNATE PART
	2N6-11635-00-00	PISTON 1 O/S 0. 5	1	ALTERNATE PART
	2N6-11636-00-00	PISTON 2 O/S 0. 0	1	ALTERNATE PART
9	2N6-11610-00-00	PISTON RINGSET STD	1	
	2N6-11610-10-00	PISTON RINGSET 1ST	1	ALTERNATE PART
	2N6-11610-20-00	PISTON RINGSET 2ND	1	ALTERNATE PART
	2N6-11610-30-00	PISTON RINGSET 3RD	1	ALTERNATE PART
	2N6-11610-40-00	PISTON RINGSET 4TH	1	ALTERNATE PART
10	93310-218A6-00	BEARING	1	
11	214-11633-00-00	PIN, PISTON	1	
12	93450-20026-00	CIRCLIP	2	
13	93306-20622-00	BEARING	2	
14	93103-30150-00	OIL SEAL (38W)	1	
15	90201-12593-00	WASHER, PLATE	1	
16	92901-12100-00	WASHER, SPRING	1	
17	90170-12347-00	NUT, HEXAGON	1	

CONTINUED ON NEXT FRAME ➤

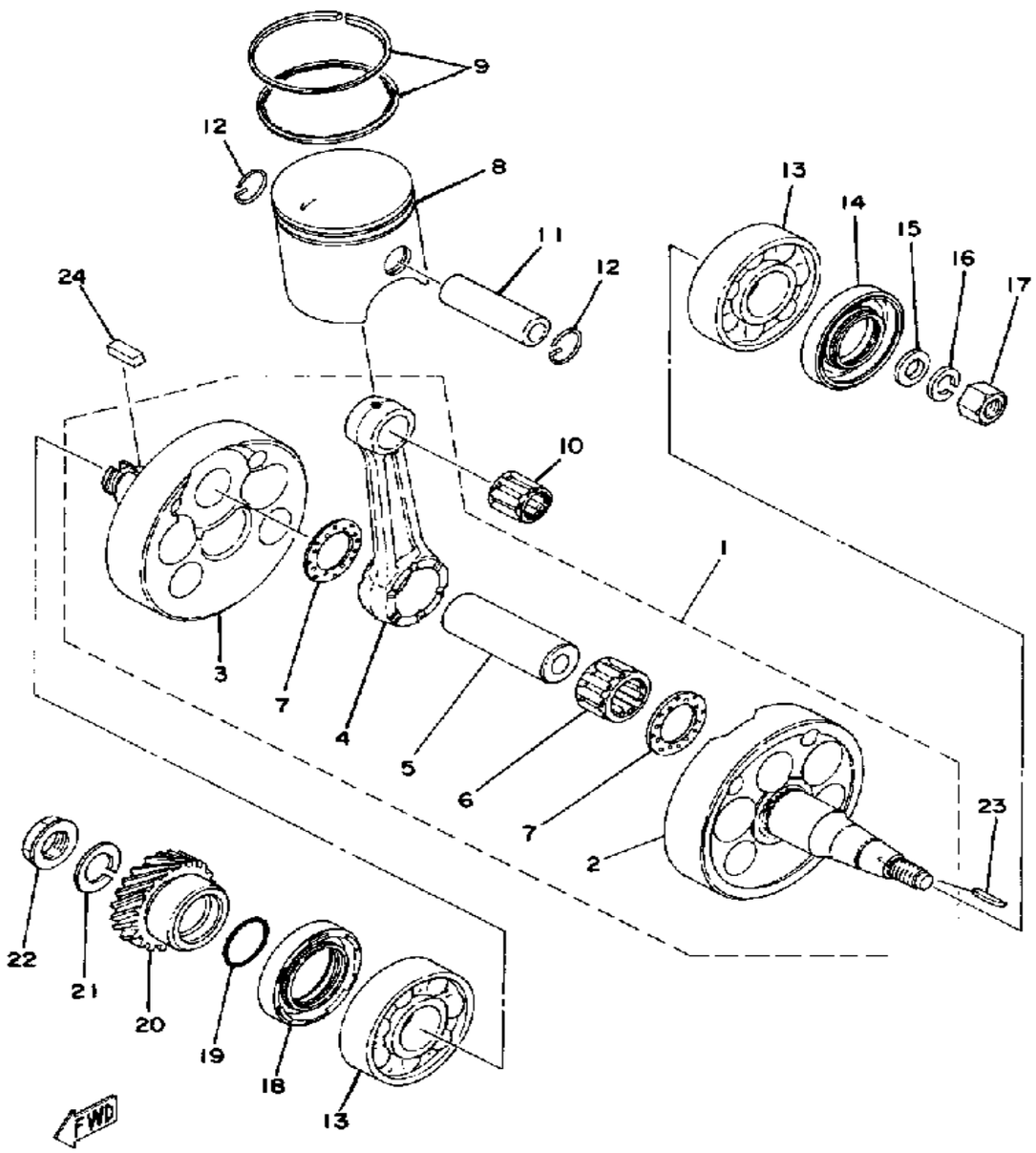

Piston Skirt Clearance new/max.	0.040 ~ 0.046mm / 0.1mm
Ring End Gap Top/2nd/3rd	0.2 ~ 0.4mm / 0.2 ~ 0.4mm / ϕ

CRANKSHAFT - PISTON

Ref. No.	Part Number	Description	Qty	Remarks
18	93103-40091-00	OIL SEAL	1	
19	93210-29282-00	O-RING	1	
20	(1M1-16111-00-00)	GEAR, PRI DRIVE	1	
21	92901-18100-00	WASHER, SPRING	1	
22	90179-18172-00	NUT	1	
23	90280-16053-00	KEY, WOODRUFF (90280-05048-00)	1	
24	90282-07019-00	KEY, STRAIGHT	1	

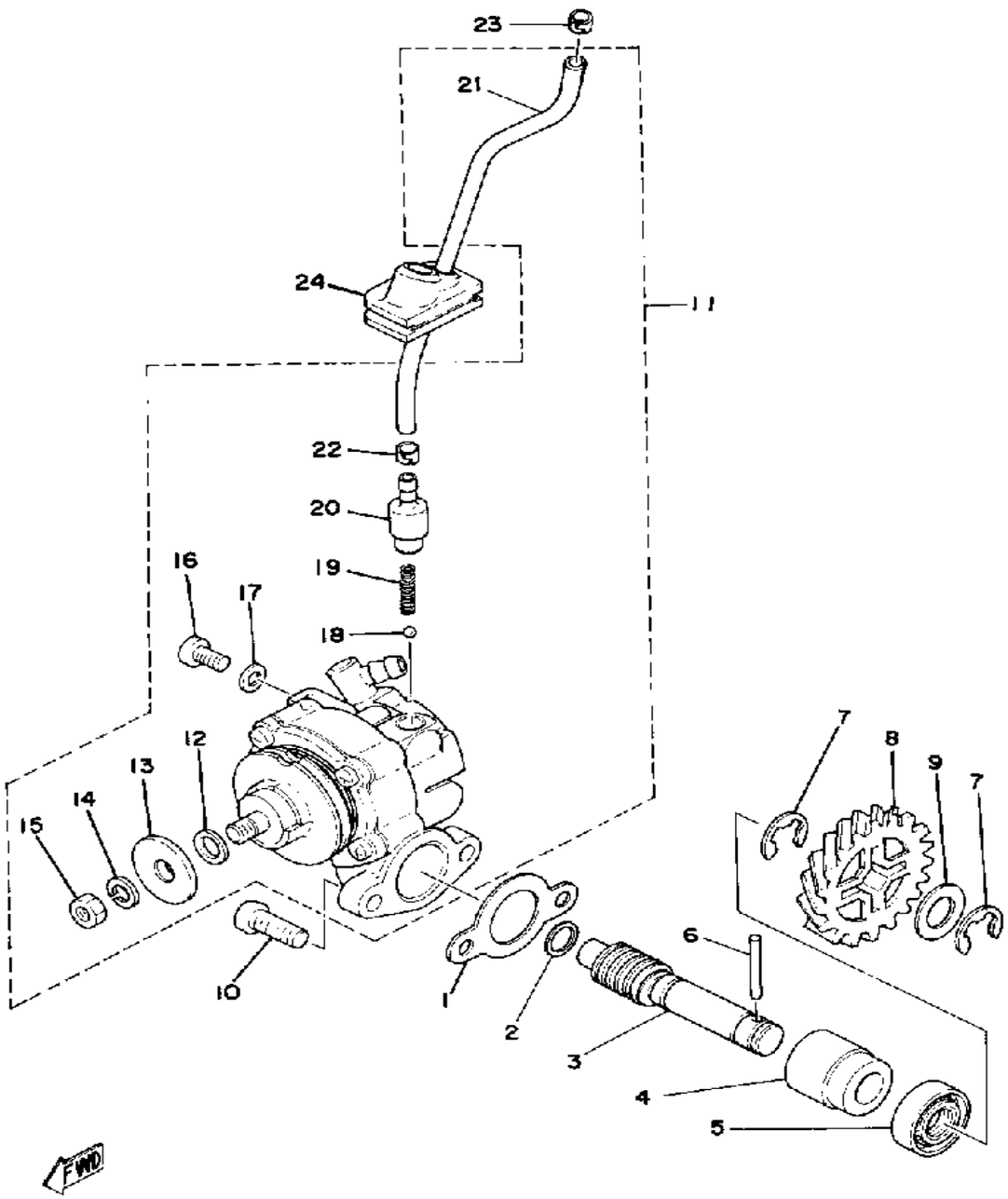

OIL PUMP

Ref. No.	Part Number	Description	Qty	Remarks
1	3MT-13116-00-00	GASKET, PUMP CASE	1	
2	90201-08624-00	WASHER, PLATE	1	
3	(525-13175-01-00)	SHAFT, WORM	1	
4	1E7-13176-00-00	METAL, WRM SHAF OTR	1	
5	93101-10090-00	OIL SEAL	1	
6	93603-22028-00	PIN, DOWEL	1	
7	99001-08600-00	CIRCLIP	2	
8	1M1-13178-00-00	GEAR, PUMP DRIVE	1	
9	90201-106H7-00	WASHER, PLATE	1	
10	98580-05016-00	SCREW, PAN HEAD	2	
11	1M1-13101-01-00	OIL PUMP ASSEMBLY	1	
12	137-13137-00-03	. SHIM, PLUNGER (0.3T)	1	U.R.
	137-13137-00-05	. SHIM, PLUNGER (0.5T)	1	U.R.
	137-13137-00-10	. SHIM, PLUNGER (1.0T)	1	
13	137-13138-01-00	. PLATE, ADJUSTING	1	
14	92990-05100-00	. WASHER, SPRING	1	
15	95380-05600-00	. NUT	1	
16	98901-04008-00	. SCREW, BIND	1	
17	90430-04004-00	. GASKET	1	
18	93505-32002-00	. BALL	1	
19	90501-02018-00	. SPRING, COMPRESSION	1	
20	402-13552-00-00	. NOZZLE	1	
21	90445-05214-00	. HOSE	1	
22	90468-02033-00	. CLIP	1	
23	90468-02033-00	CLIP	1	
24	(1M1-13174-00-00)	HOLDER, OIL PIPE	1	

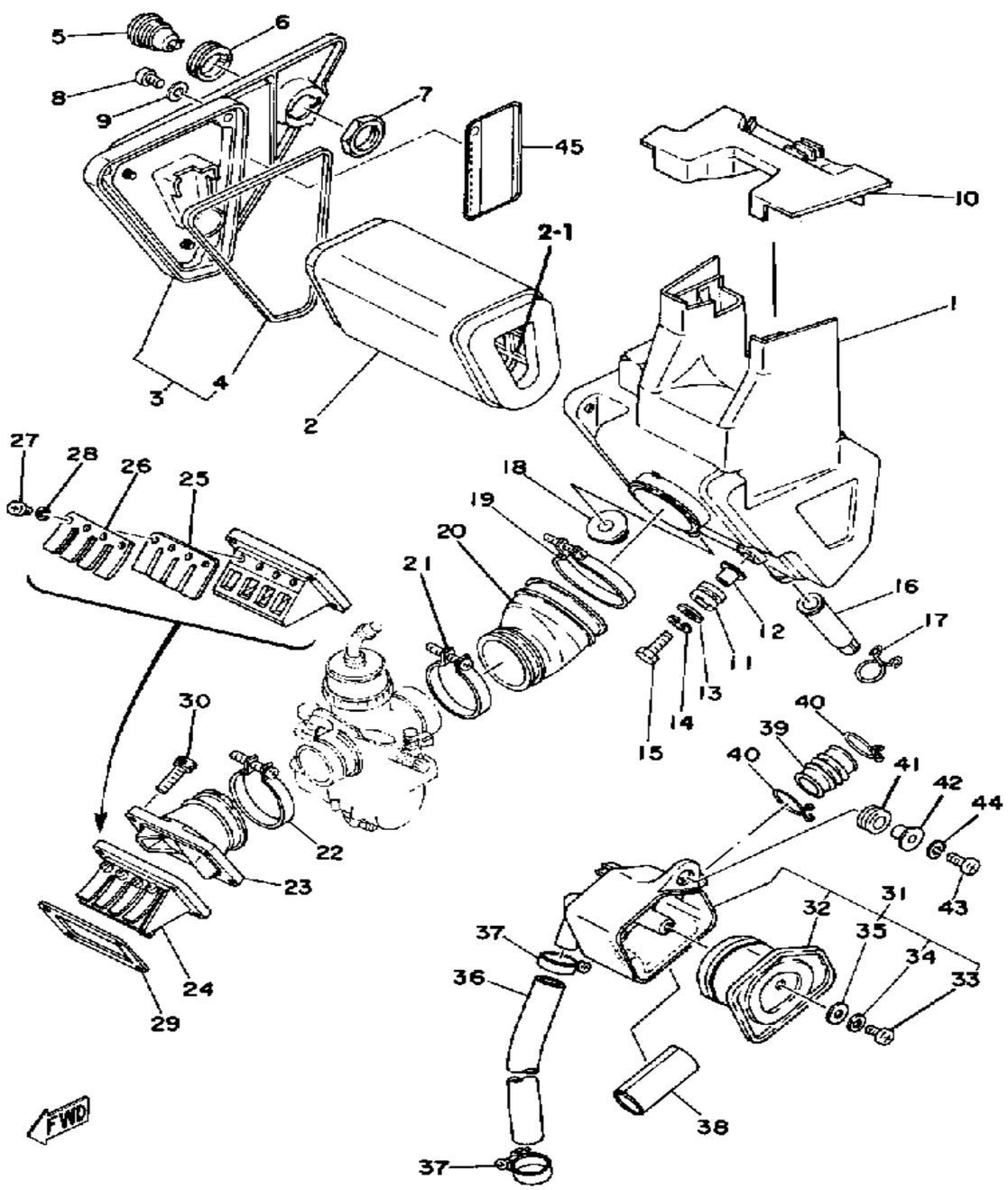

INTAKE

Ref. No.	Part Number	Description	Qty	Remarks
1	(1M1-14401-00-00)	AIR CLNR CASE ASSEMBLY .	1	
	1M1-14458-01-00	GUIDE, ELEMENT	1	
2	1M1-14451-00-00	ELEMENT, AIR CLNR	1	
3	1M1-21730-00-00	SIDE COVER ASSEMBLY 3 ...	1	
4	4L0-14457-01-00	. SEAL	1	
5	1E6-21708-00-00	SIDE CVR LOCK ASSEMBLY .	1	
6	90480-24186-00	GROMMET	1	
7	90170-22187-00	NUT	1	
8	98580-05016-00	SCREW, PAN HEAD	3	
9	92901-05600-00	WASHER, PLATE	3	
10	(1M1-14418-00-00)	COVER 2	1	
11	90480-14023-00	GROMMET	2	
12	90387-07391-00	COLLAR	2	
13	90201-06067-00	WASHER, PLATE	2	
14	92995-06100-00	WASHER, SPRING	2	
15	97011-06025-00	BOLT (97001-06025)	2	
16	509-14457-00-00	SEAL (509-14457-01)	1	
17	90467-15012-00	CLIP	1	
18	90480-18171-00	GROMMET	1	
19	90460-64065-00	CLAMP, HOSE	1	
20	1M1-14453-00-00	JOINT, AIR CLNR 1	1	
21	90460-49058-00	CLAMP, HOSE	1	
22	90450-44046-00	HOSE CLAMP ASSEMBLY ...	1	
23	1M1-13565-01-00	JOINT, CARBURETOR	1	
24	1M1-13610-10-00	REED VALVE ASSEMBLY	1	
25	1M1-13613-10-00	. REED, VALVE	2	
26	1M1-13616-00-00	. STOPPER, REED VALVEVALVE	2	
27	98580-03008-00	. SCREW, PAN HEAD (98501-03008-00)	8	

CONTINUED ON NEXT FRAME ➤

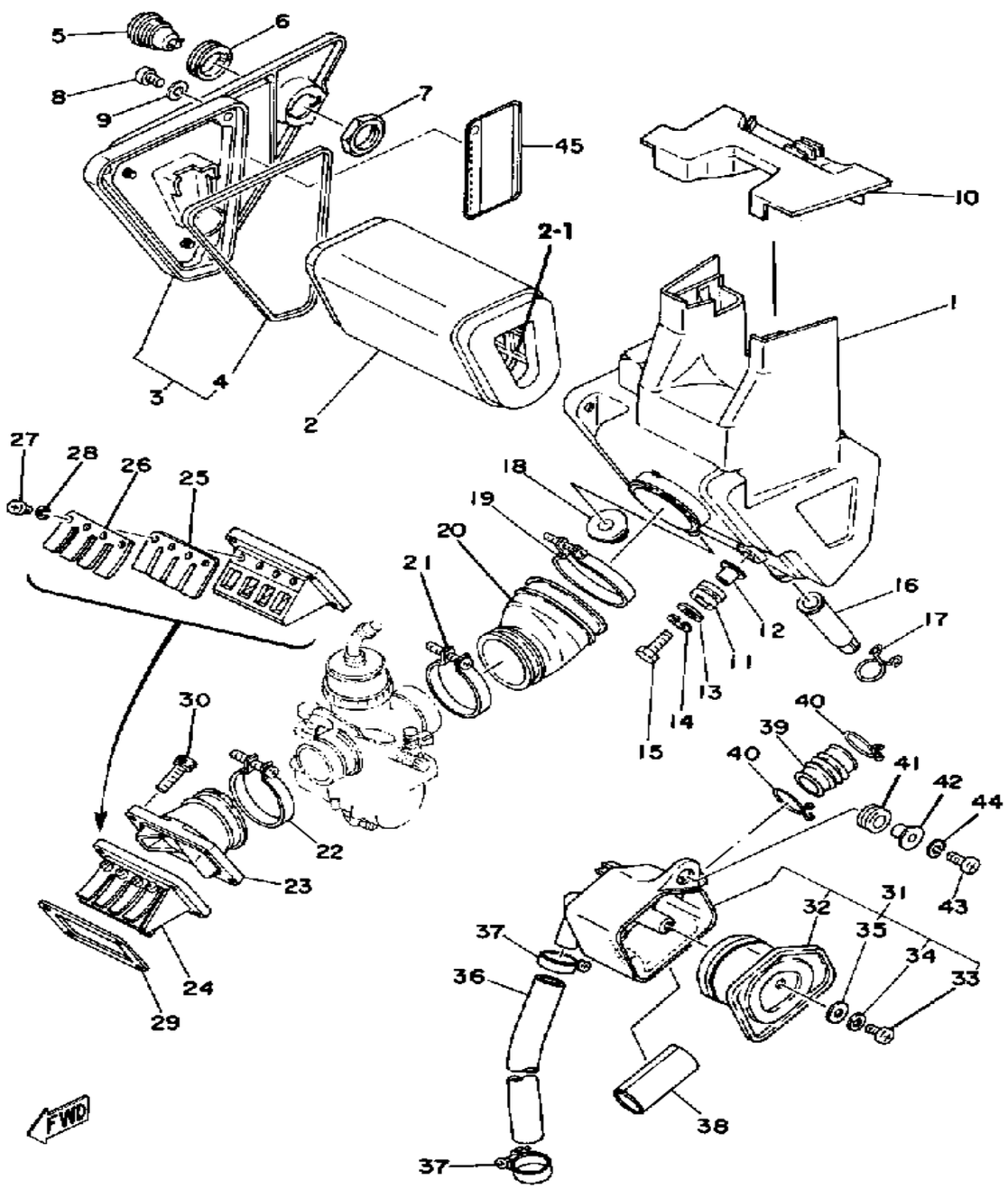

INTAKE

Ref. No.	Part Number	Description	Qty	Remarks
28	92990-03100-00	. WASHER, SPRING	8	
29	8Y7-13556-01-00	GASKET, MANIFOLD	1	
30	91316-06025-00	BOLT	4	
31	(2N6-14420-00-00)	AIR CLEANER ASSEMBLY 2	1	
32	(2N6-14461-01-00)	ELEMENT, AIR CLNR 2	1	
33	98580-06012-00	. SCREW, PAN HEAD (92501-06012-00)	1	
34	92990-06200-00	. WASHER, PLAIN	1	
35	90202-05057-00	. WASHER, PLATE	1	
36	(90445-22396-00)	HOSE	1	
37	(90460-23147-00)	CLAMP, HOSE	2	
38	(2N6-14425-00-00)	DAMPER 1	1	
39	(2N6-14437-00-00)	DUCT	1	
40	90467-20030-00	CLIP	2	
41	90480-15058-00	GROMMET	1	
42	90387-06024-00	COLLAR	1	
43	98503-06014-00	SCREW, PAN HEAD (92501-06015)	1	
44	92995-06100-00	WASHER, SPRING	1	
45	(2N6-21683-01-00)	PLATE, SPEC	1	

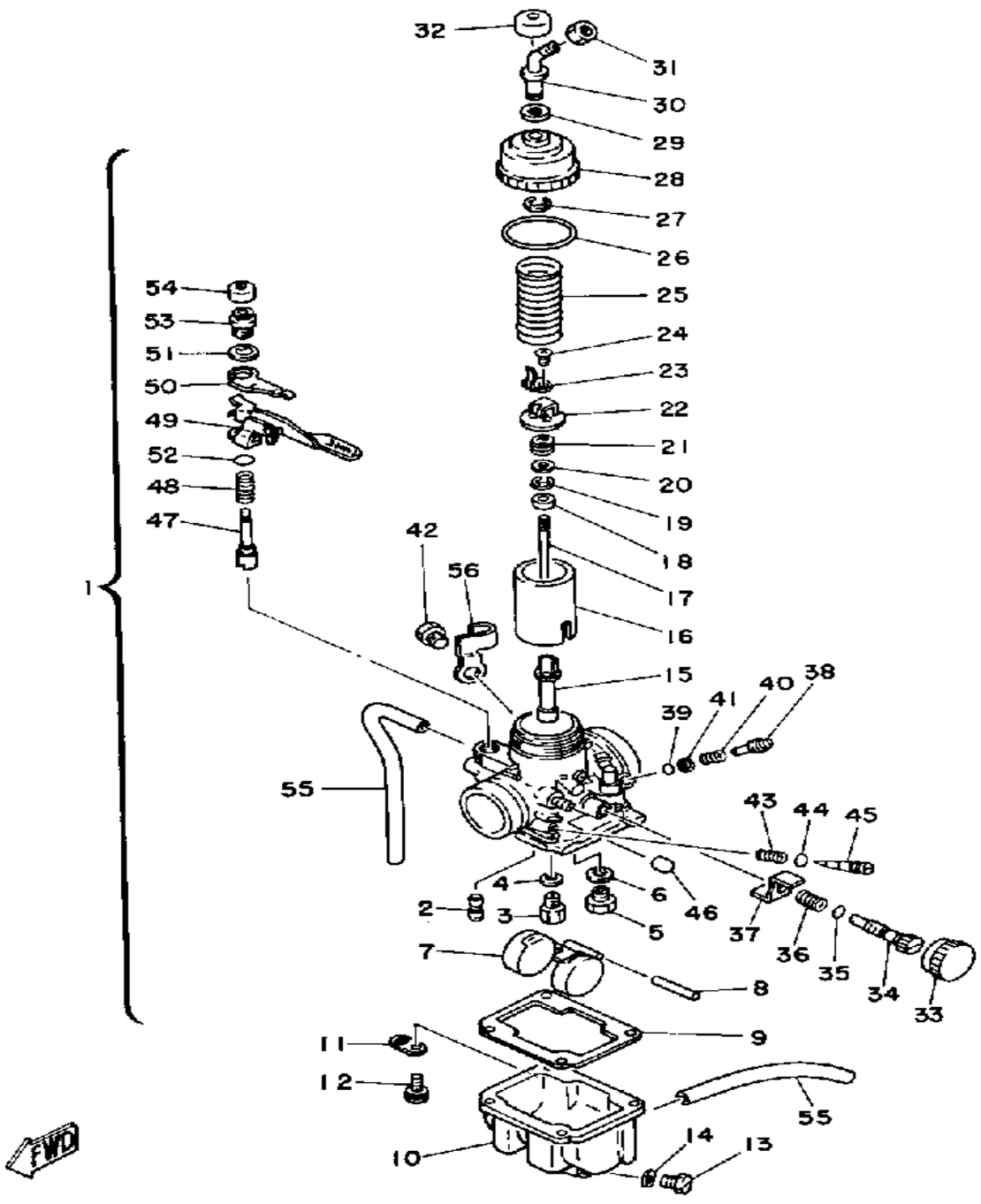

CARBURETOR

Ref. No.	Part Number	Description	Qty	Remarks
1	(2N6-14101-00-00)	CARBURETOR ASSEMBLY 1 .	1	
2	193-14142-50-00	. JET, PILOT # 0	1	
3	137-14143-30-00	. JET, MAIN #1 0	1	
4	137-14153-00-00	. WASHER, MAIN JET	1	
5	168-14190-28-00	. NEEDLE VALVE ASSEMBLY .	1	
6	214-14195-00-00	. WASHER, NEEDLE VALVE . .	1	
7	1A0-14185-00-00	. FLOAT	1	
8	127-14186-00-00	. PIN, FLOAT	1	
9	360-14184-01-00	. GASKET, FLOAT CHMBR . . .		
10	(2N6-14181-08-00)	BODY, FLOAT CHMBR 1	1	
11	132-14146-00-00	. PLATE	1	
12	(97602-04116-00)	SCREW, PN/HD.W/WSHR	4	
13	266-14191-00-00	. PLUG, DRAIN	1	
14	266-14126-00-00	. GASKET	1	
15	(2N6-14141-34-00)	NOZZLE, MAIN	1	
16	(2N6-14112-30-00)	VALVE, THROTTLE 1	1	
17	(644-14116-28-00)	NEEDLE	1	
18	2N6-14918-01-00	. RING	1	
19	164-14137-00-00	. CLIP	1	
20	2N6-14227-01-00	. WASHER	1	
21	(2N6-14589-03-00)	SPRING	1	
22	(1A0-14243-00-00)	PLATE	1	
23	(1A0-14253-00-00)	SPRING	1	
24	98580-03010-00	. SCREW, PAN HEAD	2	
25	248-14131-00-00	. SPRING, THRTL VALVE	1	
26	361-14147-00-00	. O-RING	1	
27	363-14137-00-00	. CLIP	1	
28	498-14158-00-33	. TOP, MIXING CHAMBER (498-14158-00)	1	

CONTINUED ON NEXT FRAME ➤

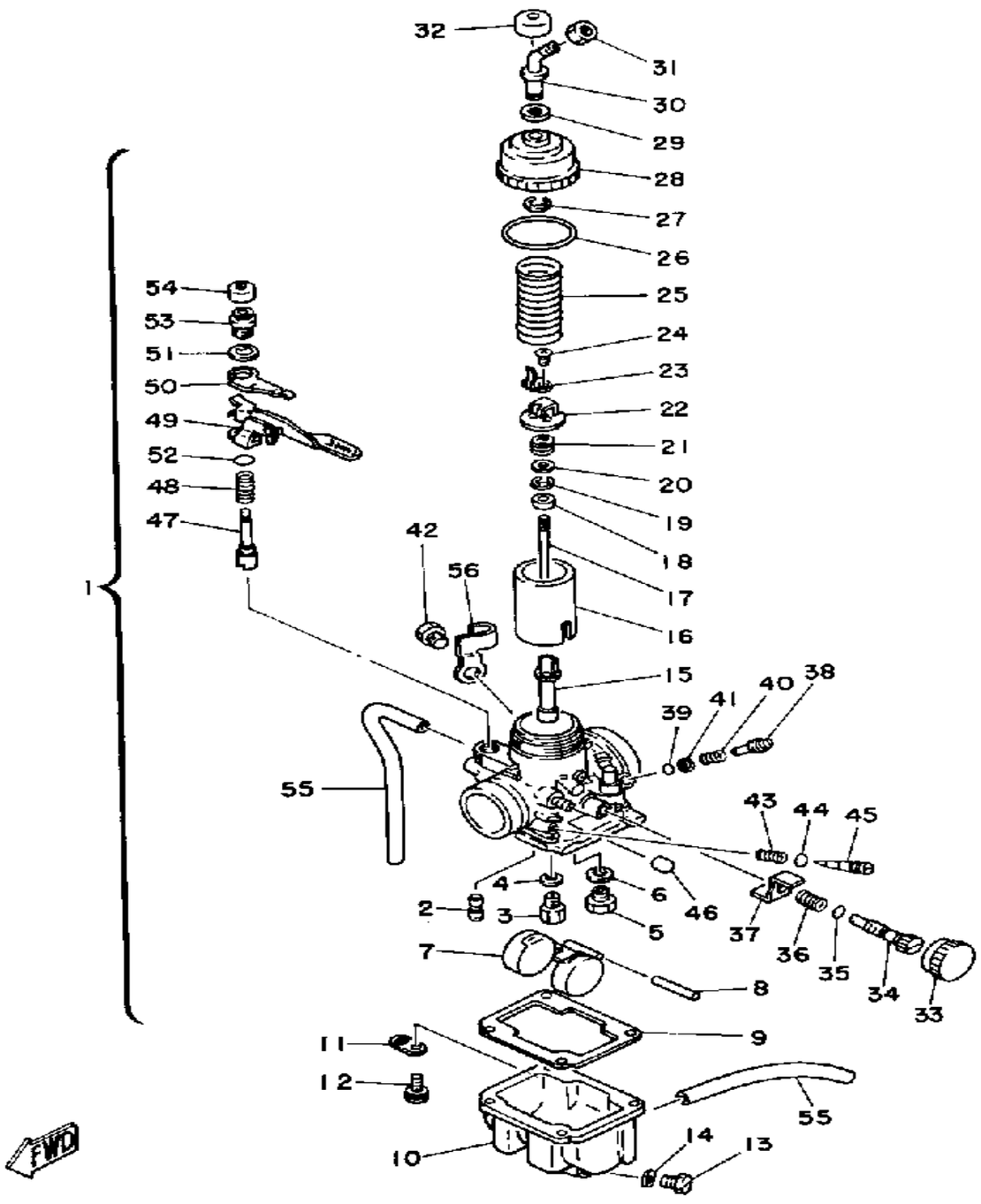

CARBURETOR

Ref. No.	Part Number	Description	Qty	Remarks
29	509-14198-00-00	. GASKET	1	
30	23X-14106-00-00	. CBLE AJST SCRW SET	1	
31	127-14161-00-00	. NUT, CABLE ADJUSTING	1	
32	1M1-14169-00-00	. CAP	1	
33	(2N6-14969-00-00)	CAP	1	
34	2N6-14122-00-00	. SCREW, THROTTLE	1	
35	214-14147-00-00	. O-RING	1	
36	493-14133-00-00	. SPRING, THRTL STOP	1	
37	(2N6-14243-00-00)	PLATE	1	
38	(2N6-14123-00-00)	SCREW, AIR ADJUSTING	1	
39	(849-14147-00-00)	O-RING	1	
40	127-14134-00-00	. SPRING, AIR ADJUSTING	1	
41	(2N6-14952-00-00)	WASHER	1	
42	1A0-14991-00-00	. SCREW	1	
43	2H0-14212-00-00	. SPRING, PILOT ADJUSTING	1	
44	2H0-14147-00-00	. O-RING	1	
45	(2N6-14923-00-00)	SCREW, PILOT	1	
46	895-14169-00-00	. CAP	1	
47	1A0-14171-00-00	. PLUNGER, STARTER	1	
48	256-14135-00-00	. SPRING, PLUNGER	1	
49	(1A0-14175-00-00)	LEVER, STARTER 1	1	
50	(170-14178-00-00)	PLATE, STARTER LVR	1	
51	(1A0-14179-00-00)	WASHER, STARTER LVR	1	
52	93220-09001-00	. O-RING	1	
53	(500-14174-00-00)	CAP, PLUNGER	1	
54	802-14173-00-00	. COVER, PLUNGER CAP	1	
55	439-14197-00-00	. PIPE, AIRVENT	2	
56	90465-10108-00	CLAMP	1	

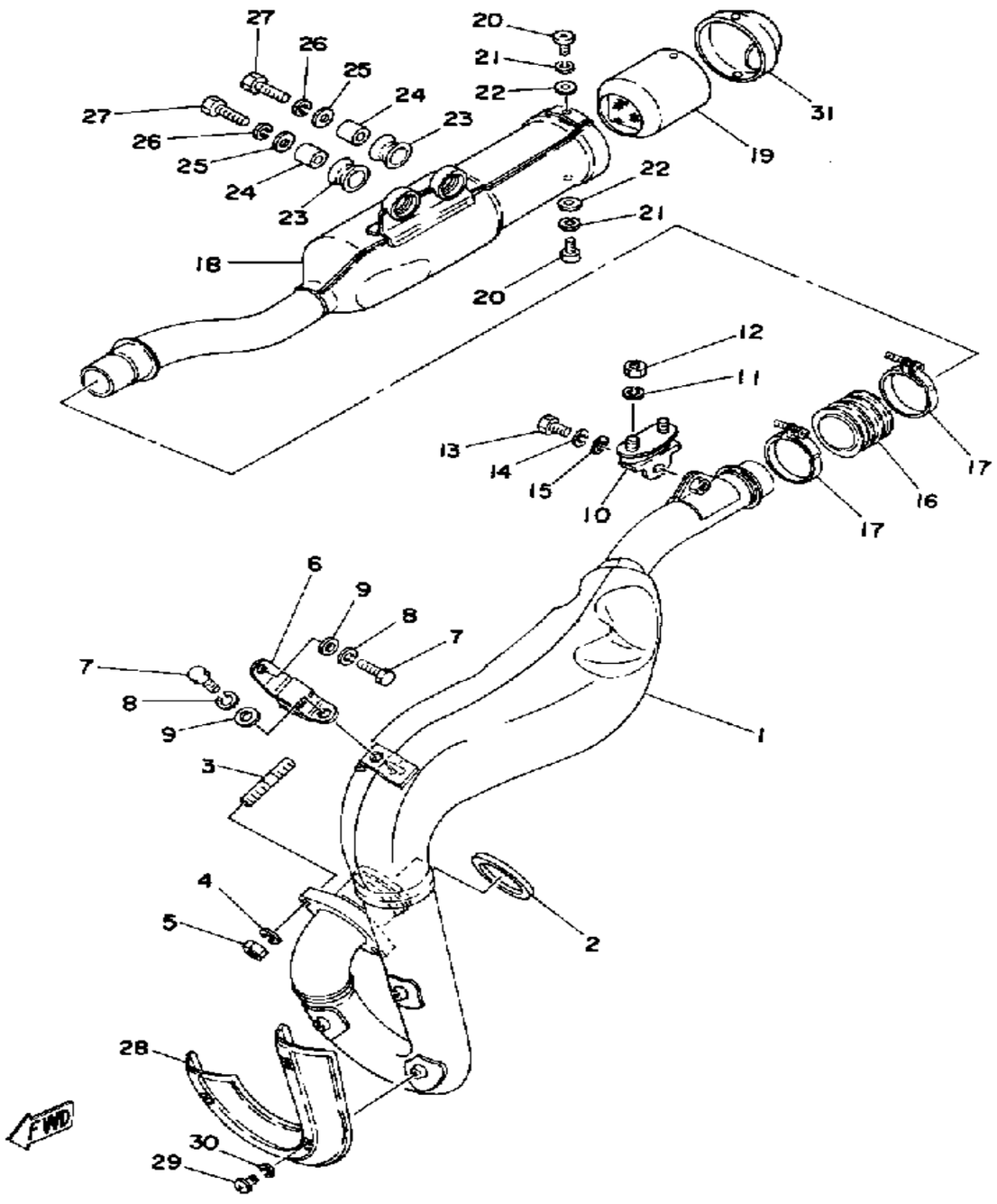

EXHAUST

Ref. No.	Part Number	Description	Qty	Remarks
1	3J4-14610-00-00	EXHAUST PIPE ASSEMBLYL .	1	
2	214-14613-00-00	GASKET, EXST PIPE	1	
3	90116-08264-00	BOLT, STUD	2	
4	92990-08100-00	WASHER, SPRING	2	
5	95333-08600-00	NUT	2	
6	1M1-14772-00-00	STAY, MUFFLER 2	1	
7	97011-06016-00	BOLT	2	
8	92995-06100-00	WASHER, SPRING	2	
9	90201-061A5-00	WASHER, PLATE	2	
10	(2N6-14771-00-00)	STAY, MUFFLER 1	1	
11	92995-06100-00	WASHER, SPRING	2	
12	95380-06600-00	NUT, HEXAGON	2	
13	97313-08018-00	BOLT, HEXAGON	1	
14	92990-08100-00	WASHER, SPRING	1	
15	92901-08600-00	WASHER, PLATE	1	
16	1M1-14714-00-00	GASKET, MUFFLER	1	
17	90460-43053-00	CLAMP, HOSE	2	
18	2N6-14753-00-00	SILENCER, EXHAUST	1	
19	(1E6-14786-01-00)	ARRESTER, SPARK	1	
20	98580-06012-00	SCREW, PAN HEAD (92501-06012-00)	2	
21	92995-06100-00	WASHER, SPRING	2	
22	90201-061A5-00	WASHER, PLATE	2	
23	565-14747-00-00	DAMPER, MUFFLER	2	
24	90387-08258-00	COLLAR	2	
25	90201-08753-00	WASHER, PLATE	2	
26	92990-08100-00	WASHER, SPRING	2	
27	97313-08030-00	BOLT, HEXAGON	2	
28	1M1-14728-00-00	PROTECTER, MUFF 2	1	

CONTINUED ON NEXT FRAME ➤

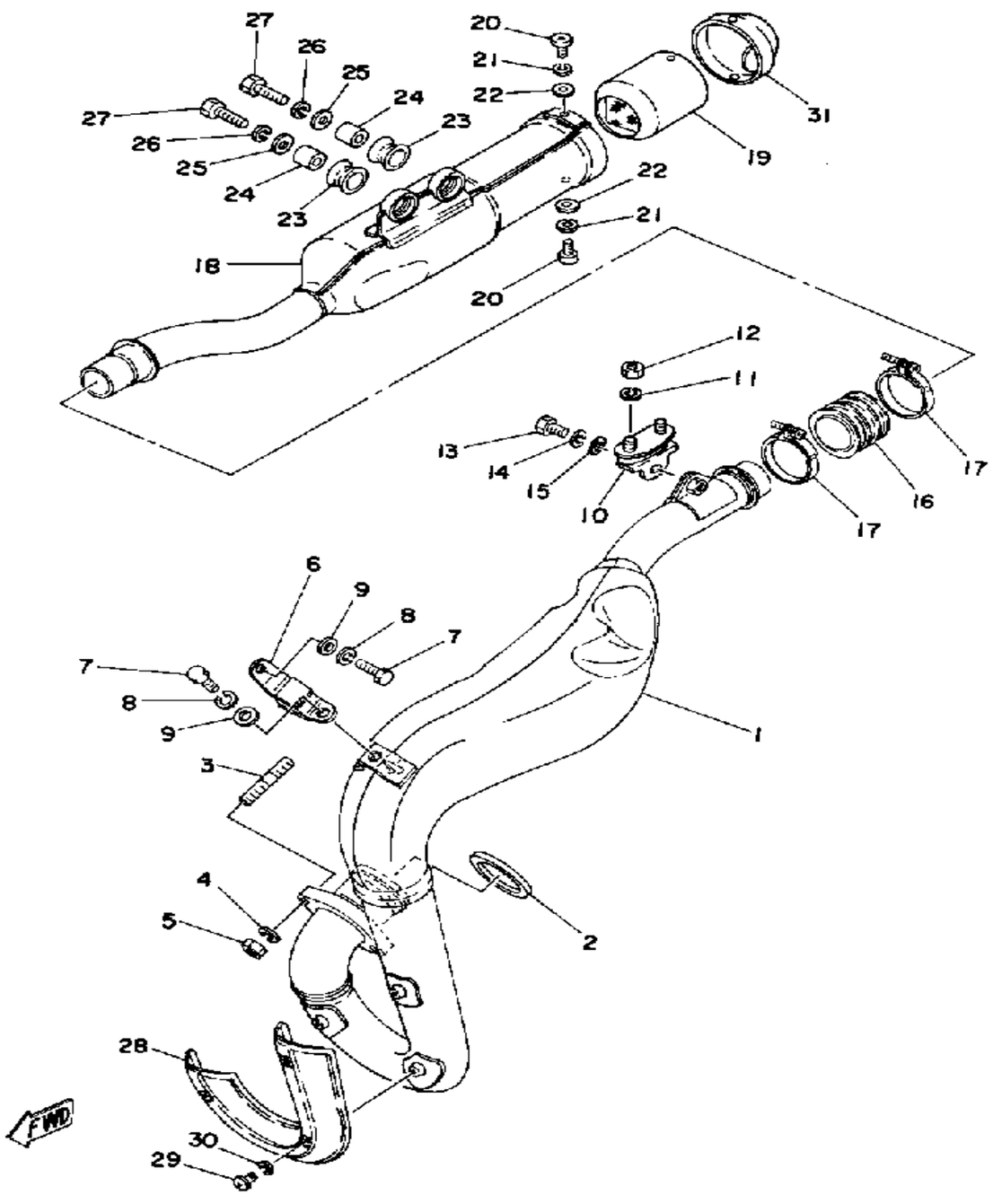

EXHAUST

Ref. No.	Part Number	Description	Qty	Remarks
29	98906-06010-00	SCREW, BIND	3	
30	92906-06100-00	WASHER, SPRING	3	
31	2N6-14787-00-00	CAP, SILENCER	1	

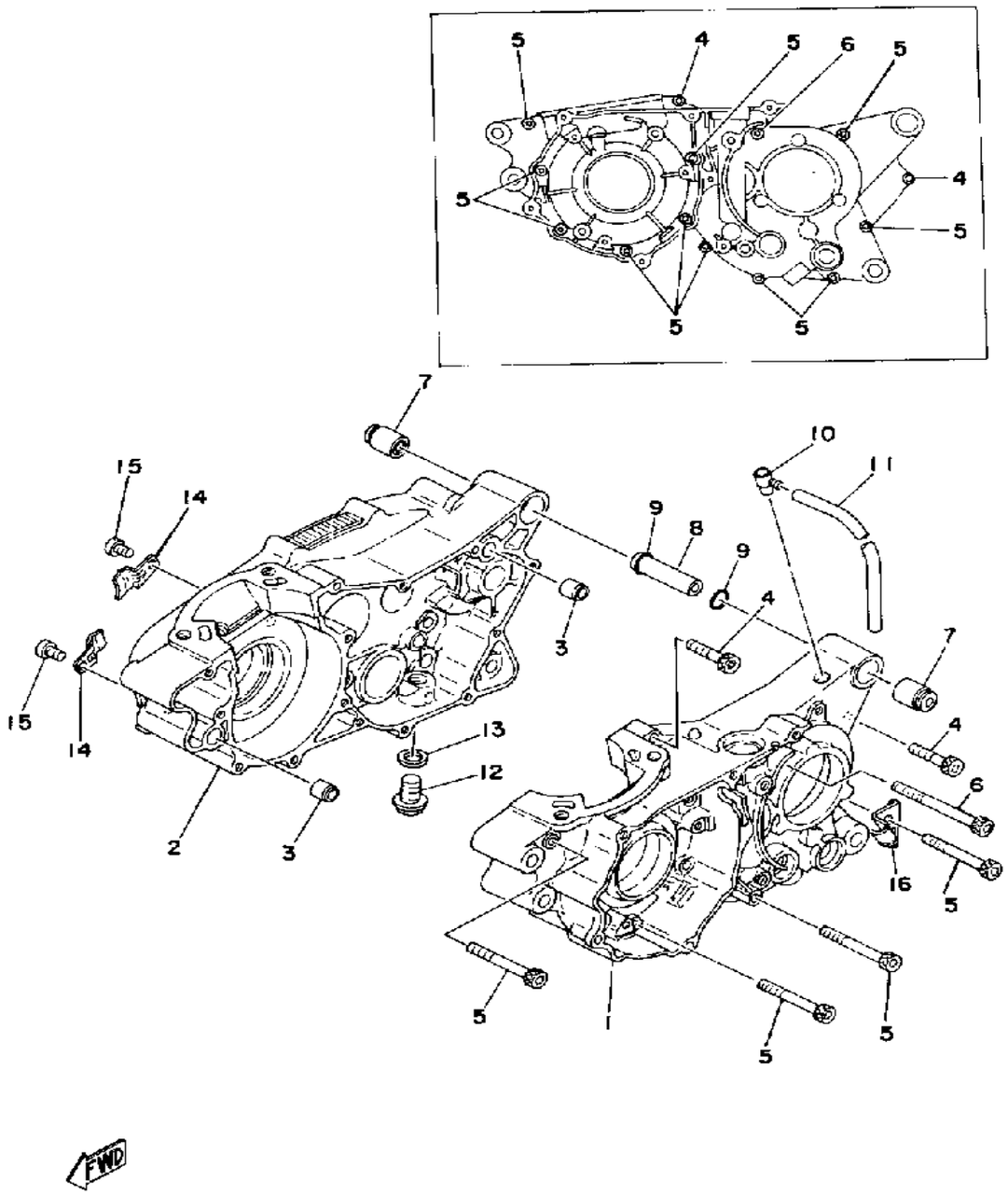

CRANKCASE

Ref. No.	Part Number	Description	Qty	Remarks
1	1M1-15111-02-00	CRANKCASE 1	1	
2	1M1-15121-00-00	CRANKCASE 2	1	
3	99510-12016-00	PIN, DOWEL	2	
4	91316-06035-00	BOLT	2	
5	91316-06060-00	BOLT	11	
6	91316-06080-00	BOLT	1	
7	328-15316-00-00	DAMPER, ENG MOUNT 1 (328-15316-00)	2	
8	438-15317-00-00	SPACER, ENG MOUNT	1	
9	93210-11073-00	O-RING	2	
10	583-15371-00-00	BREATHER	1	
11	90445-07340-00	HOSE	1	
12	90109-14385-00	BOLT	1	
13	137-15353-00-00	GASKET, DRAIN	1	
14	434-15118-00-00	HOLDER	2	
15	92501-08010-00	SCREW, PAN HEAD	2	
16	(90465-14095-00)	CLAMP	1	

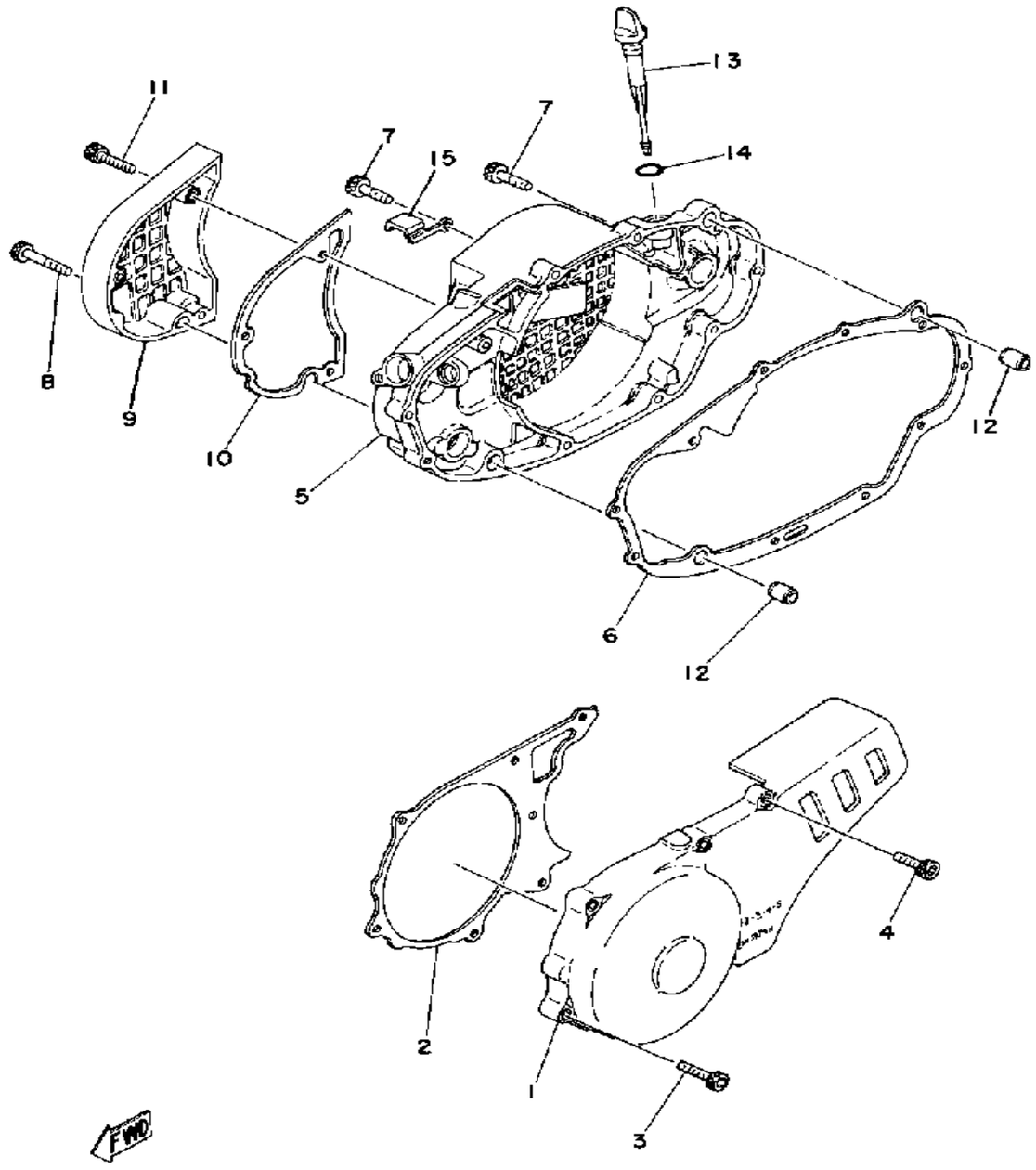

CRANKCASE COVER

Ref. No.	Part Number	Description	Qty	Remarks
1	1M2-15421-02-00	COVER, CRANKCASE R	1	
2	1M1-15451-00-00	GASKET, CRCS COVER	1	
3	90110-06138-00	BOLT, HEX SOCKET HEAD	5	
4	91316-06025-00	BOLT	2	
5	1M1-15431-00-00	COVER, CRANKCASE 3	1	
6	1M1-15461-00-00	GASKET, CRCS CVR 2	1	
7	91316-06025-00	BOLT	10	
8	91316-06040-00	BOLT, SOCKET HEAD	1	
9	1M1-15416-01-00	COVER, OIL PUMP	1	
10	1M1-15456-00-00	GASKET, O/PMP CVR 1	1	
11	90110-06138-00	BOLT, HEX SOCKET HEAD	3	
12	99510-12016-00	PIN, DOWEL	2	
13	1M1-15363-00-00	PLUG, OIL	1	
14	93210-14104-00	O-RING	1	
15	(90465-10096-00)	CLAMP	1	

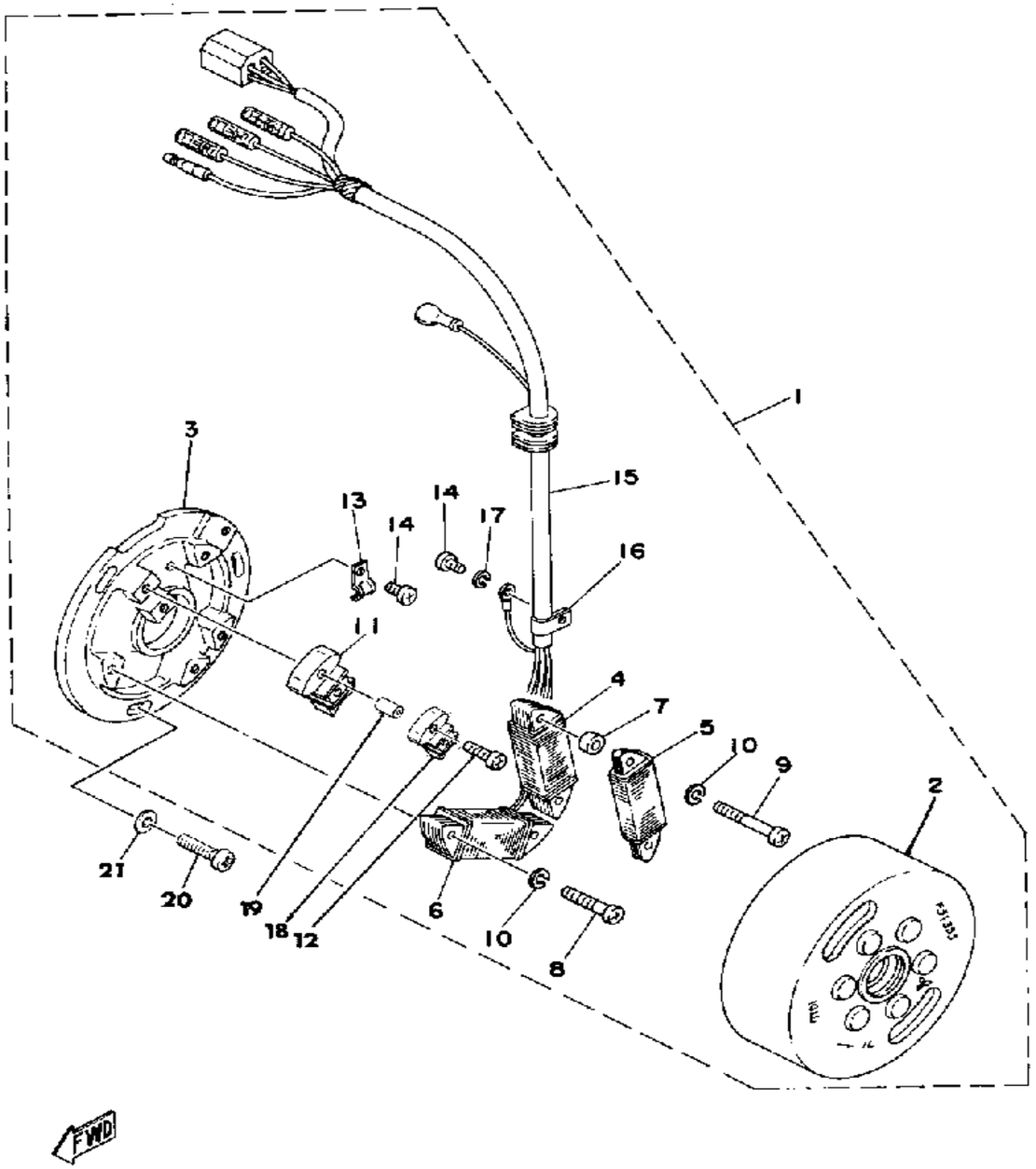

C - D - I - MAGNETO

Ref. No.	Part Number	Description	Qty	Remarks
1	(2N6-85500-21-00)	CDI MAGNETO ASSEMBLY . . .	1	
2	(2N6-85550-21-00)	ROTOR ASSEMBLY	1	
3	1M2-85509-20-00	. BASE, MAGNETO	1	
4	2N6-85511-21-00	. COIL SOURCE 1	1	
5	2N6-85512-21-00	. COIL SOURCE 2	1	
6	1M2-85513-22-00	. COIL, LIGHTING 1	1	
7	8G8-85519-20-00	. SPACER	2	
8	98580-05035-00	. SCREW, PAN HEAD	2	
9	98501-05040-00	. SCREW, PAN HEAD (98502-05040)	2	
10	92990-05100-00	. WASHER, SPRING	4	
11	(2N6-85580-21-00)	COIL, PULSER	1	
12	(97680-04130-00)	SCREW, PN/HD.W/WSHR	2	
13	445-81328-20-00	. CLAMP	1	
14	98511-04006-00	. SCREW, PAN HEAD	2	
15	2N6-85511-21-00	. COIL SOURCE 1	1	
16	445-81328-20-00	. CLAMP	1	
17	92901-04100-00	. WASHER, SPRING	1	
18	(2N6-85543-20-00)	COIL PULSER	1	
19	1W2-85516-20-00	. SPACER	2	
20	98580-06020-00	SCREW, PAN HEAD	3	
21	90201-061A5-00	WASHER, PLATE	3	

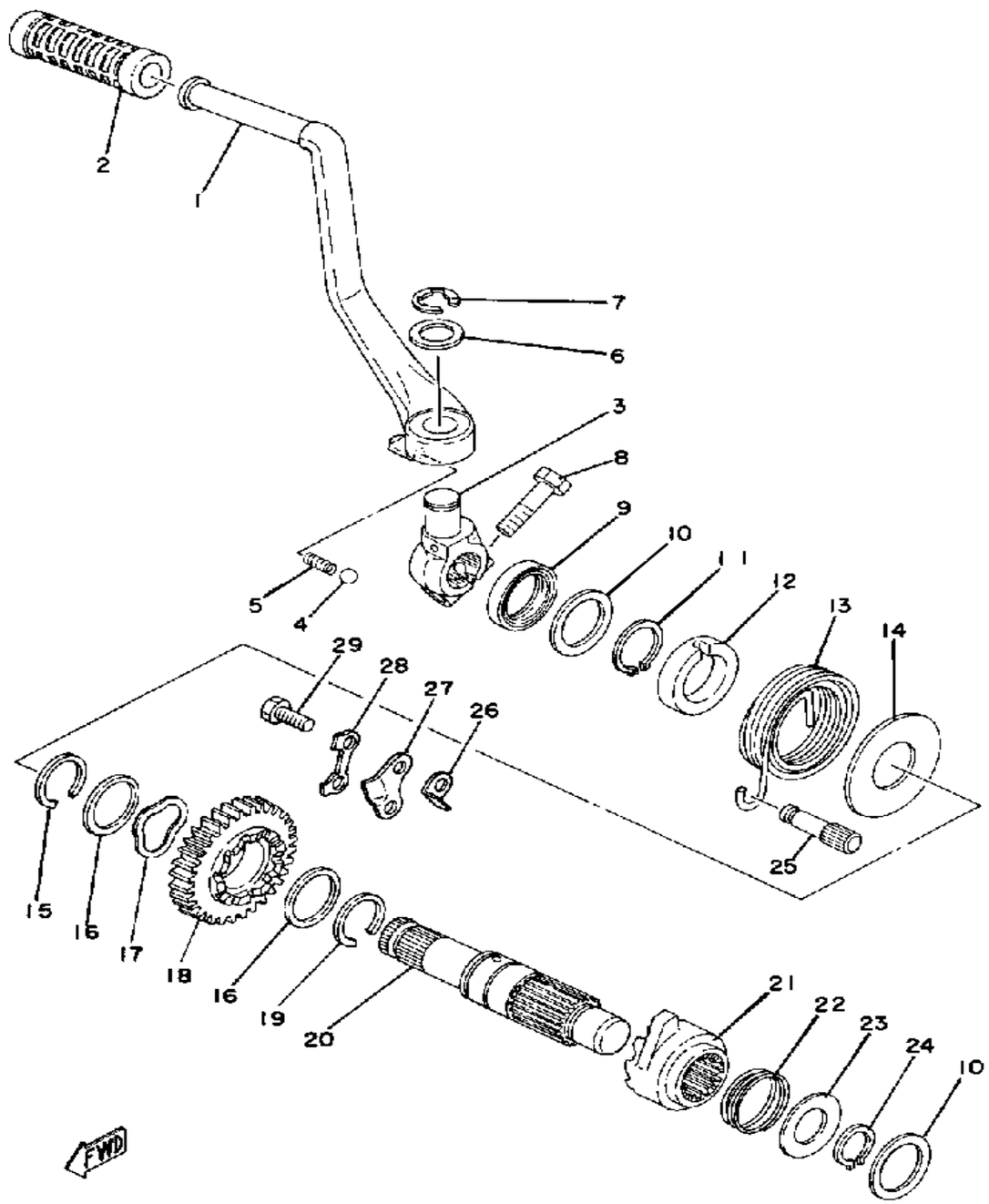

KICK - STARTER

Ref. No.	Part Number	Description	Qty	Remarks
1	1M1-15620-02-00	KICK CRANK ASSEMBLY	1	YAMAHA BLACK
2	156-15618-01-00	COVER, KICK LEVER	1	
3	583-15621-00-00	BOSS, KICK CRANK	1	YAMAHA BLACK
4	93507-32031-00	BALL 7/ 2	1	
5	90501-12081-00	SPRING, COMPRESSION	1	
6	90201-15234-00	WASHER, PLATE	1	
7	99006-10600-00	CIRCLIP	1	
8	97313-08030-00	BOLT, HEXAGON	1	
9	93102-20309-00	OIL SEAL	1	
10	90201-20278-00	WASHER, PLATE	2	
11	93410-25010-00	CIRCLIP	1	
12	(1M1-15664-00-00)	GUIDE, SPRING	1	
13	90508-32317-00	SPRING, TORSION	1	
14	(90201-25637-00)	WASHER, PLATE	1	
15	93440-25084-00	CIRCLIP	1	
16	90201-253K0-00	WASHER, PLATE (T=1.0)	2	
17	90206-25059-00	WASHER, WAVE	1	
18	1W4-15641-01-00	GEAR, KICK	1	
19	93440-25020-00	CIRCLIP	1	
20	(1M1-15671-00-00)	WHEEL, RATCHET	1	
21	(1M1-15671-00-00)	WHEEL, RATCHET	1	
22	90501-23143-00	SPRING, COMPRESSION (363-15675-00)	1	
23	363-15676-00-00	COVER, SPRING	1	
24	93410-20038-00	CIRCLIP	1	
25	(1M1-15668-01-00)	STOPPER	1	
26	(1W4-15668-00-00)	STOPPER	1	
27	(1W4-15674-00-00)	GUIDE, RATCHET WHL	1	
28	(1W4-15686-00-00)	WASHER, LOCK	1	

CONTINUED ON NEXT FRAME ➤

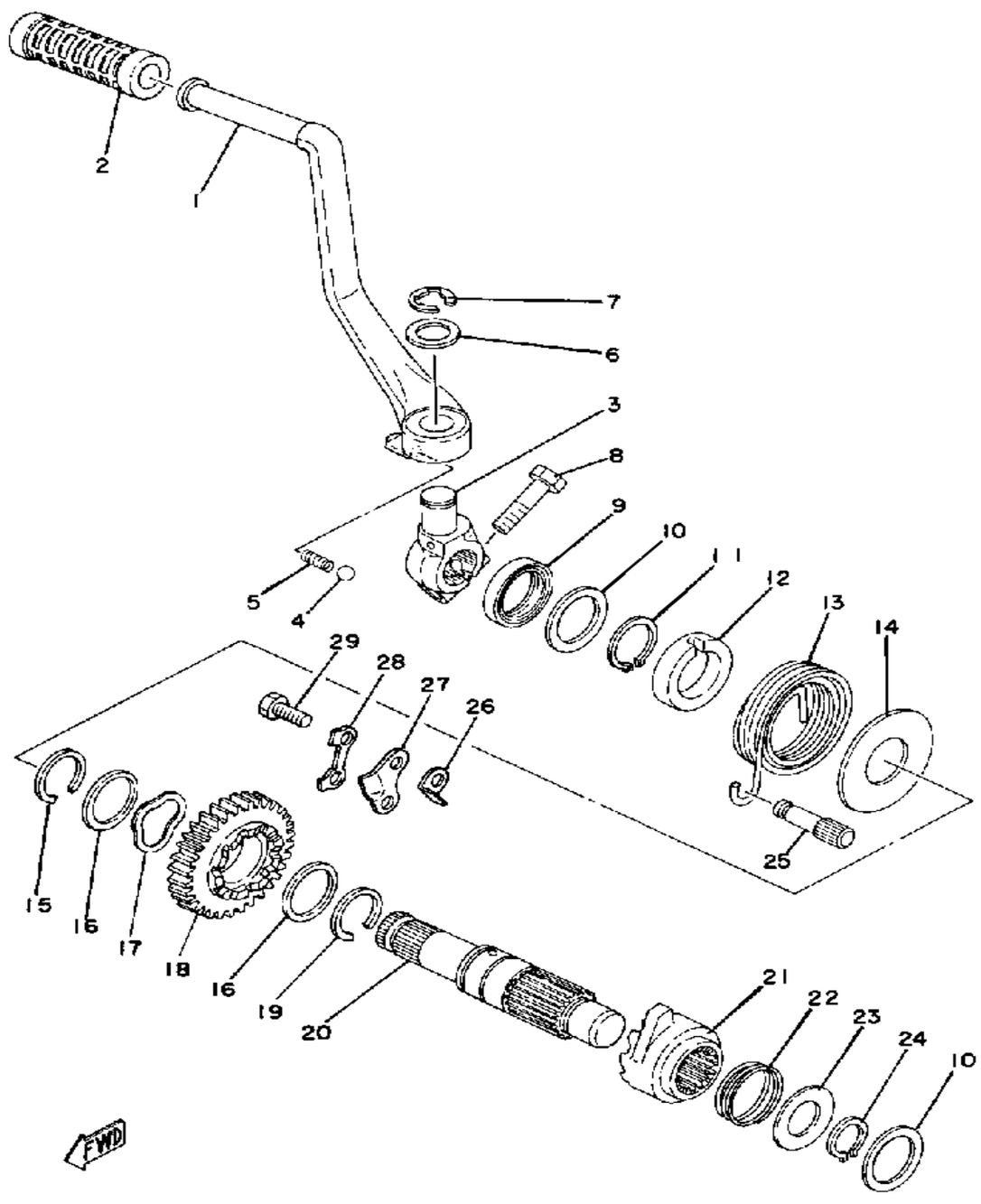

KICK - STARTER

Ref. No.	Part Number	Description	Qty	Remarks
29	97313-06016-00	BOLT	2	

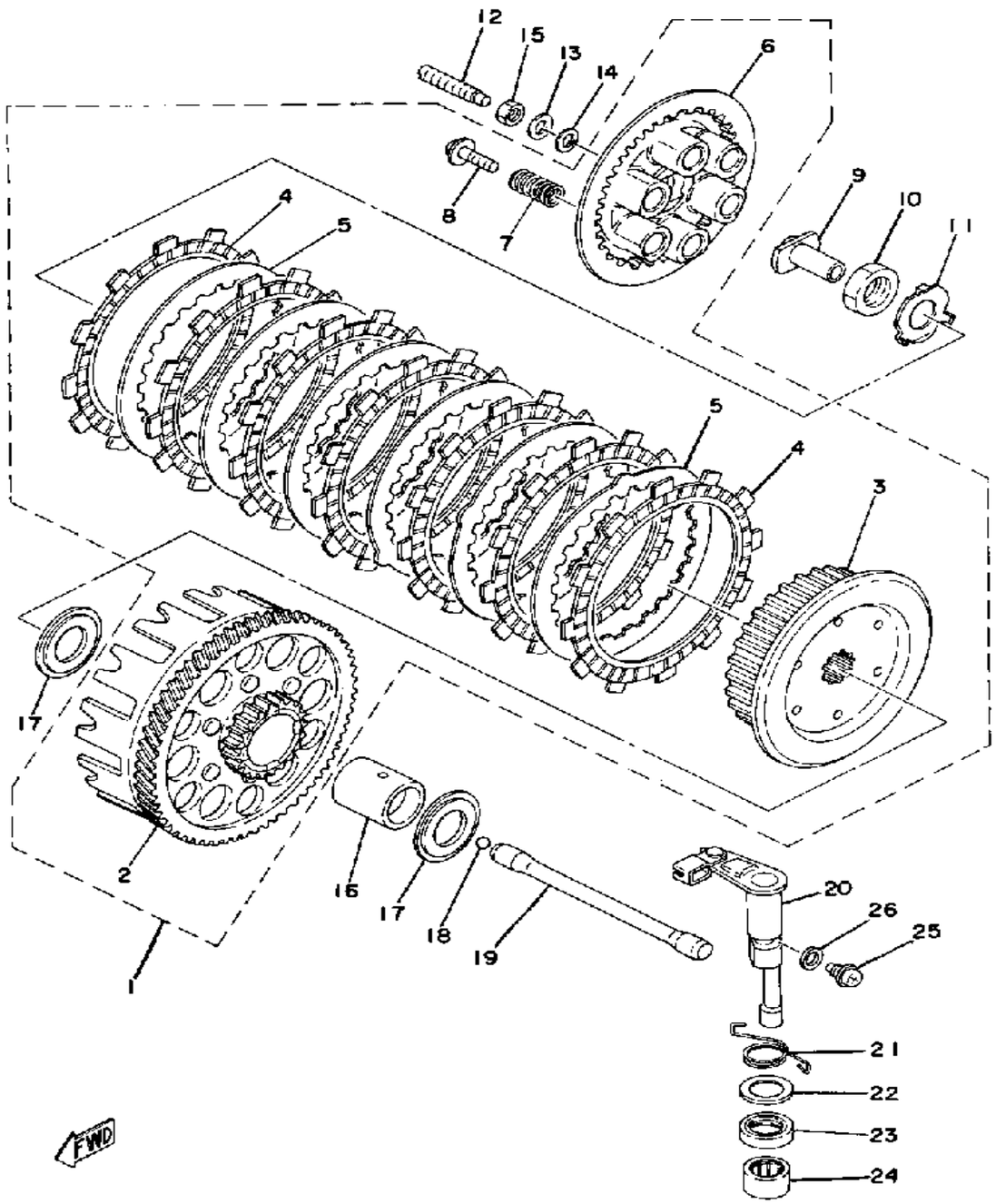

CLUTCH

Ref. No.	Part Number	Description	Qty	Remarks
1	(2N6-16300-00-00)	CLUTCH ASSEMBLY	1	
2	(2N6-16150-00-00)	PRI DRVN GEAR	1	
3	509-16371-01-00	. BOSS, CLUTCH	1	
4	363-16321-00-00	. PLATE, FRICTION	7	
5	498-16325-00-00	. PLATE, CLUTCH 2	6	
6	1M1-16351-00-00	. PLATE, PRESSURE 1	1	
7	90501-23428-00	. SPRING, COMPRESSION	6	
8	90159-06016-00	. SCREW, WITH WASHER	6	
9	1M1-16356-00-00	ROD, PUSH 1	1	
10	90170-20195-00	NUT, HEXAGON	1	
11	90215-20125-00	WASHER, LOCK	1	
12	90149-08105-00	SCREW, SPEC''L SHAPE	1	
13	92990-08200-00	WASHER, PLAIN	1	
14	92990-08100-00	WASHER, SPRING	1	
15	95311-08700-00	NUT	1	
16	1M1-16181-00-00	SPACER 1	1	
17	360-16154-00-00	PLATE, THRUST 1	2	
18	93515-32029-00	BALL	1	
19	1M1-16357-00-00	ROD, PUSH 2	1	
20	1W4-16380-00-00	PUSH LEVER ASSEMBLY	1	
21	90508-14360-00	SPRING, TORSION	1	
22	90201-17327-00	WASHER, PLATE	1	
23	93102-17004-00	OIL SEAL, SD-TYPE	1	
24	93315-11720-00	BEARING	1	
25	90149-08108-00	SCREW, SPEC''L SHAPE	1	
26	90430-08069-00	GASKET	1	

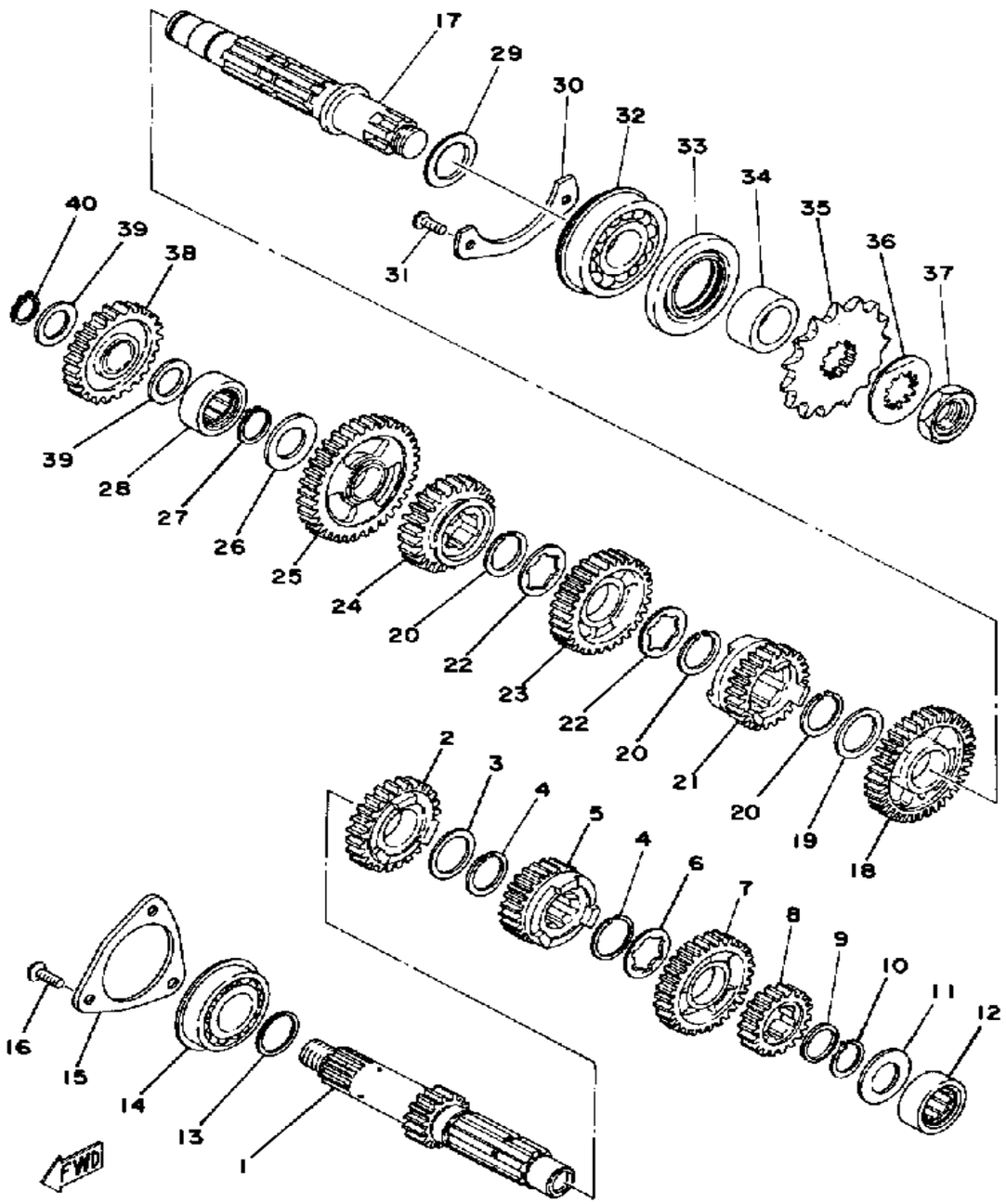

TRANSMISSION

Ref. No.	Part Number	Description	Qty	Remarks
1	1M1-17411-00-00	AXLE, MAIN	1	
2	1M1-17141-01-00	GEAR, 4TH PINION	1	
3	90201-253K0-00	WASHER, PLATE (T=1.0)	1	
4	93440-25084-00	CIRCLIP	2	
5	(1M1-17131-01-00)	GEAR, 3RD PINION	1	
6	90209-22082-00	WASHER (0.5T)	1	
7	1M1-17151-00-00	GEAR, 5TH PINION	1	
8	(1M1-17121-01-00)	GEAR, 2ND PINION	1	
9	90201-20613-00	WASHER, PLATE	1	
10	93410-20038-00	CIRCLIP	1	
11	90201-20278-00	WASHER, PLATE	1	
12	93311-62035-00	BEARING, CYLINDRICAL	1	
13	168-17428-01-03	SHIM 2 (25-34-0.3)	1	U.R.
	168-17428-01-05	SHIM 2 (25-34-0.5)	1	U.R.
14	93306-20535-00	BEARING (93306-20515)	1	
15	1W4-15383-00-00	PLATE, BRNG COVER	1	
16	98603-06012-00	SCREW, OVAL HEAD (92701-06012)	3	
17	1M2-17421-00-00	AXLE, DRIVE	1	
18	1M1-17221-01-00	GEAR, 2ND WHEEL	1	
19	90201-253K0-00	WASHER, PLATE (T=1.0)	1	
20	93440-25084-00	CIRCLIP	3	
21	1M1-17251-01-00	GEAR, 5TH WHEEL	1	
22	90209-22082-00	WASHER (0.5T)	2	
23	1M1-17231-00-00	GEAR, 3RD WHEEL	1	
24	1M1-17241-01-00	GEAR, 4TH WHEEL	1	
25	(1M1-17211-00-00)	GEAR, 1ST WHEEL	1	
26	90201-20278-00	WASHER, PLATE	1	
27	93410-20038-00	CIRCLIP	1	

CONTINUED ON NEXT FRAME ➤

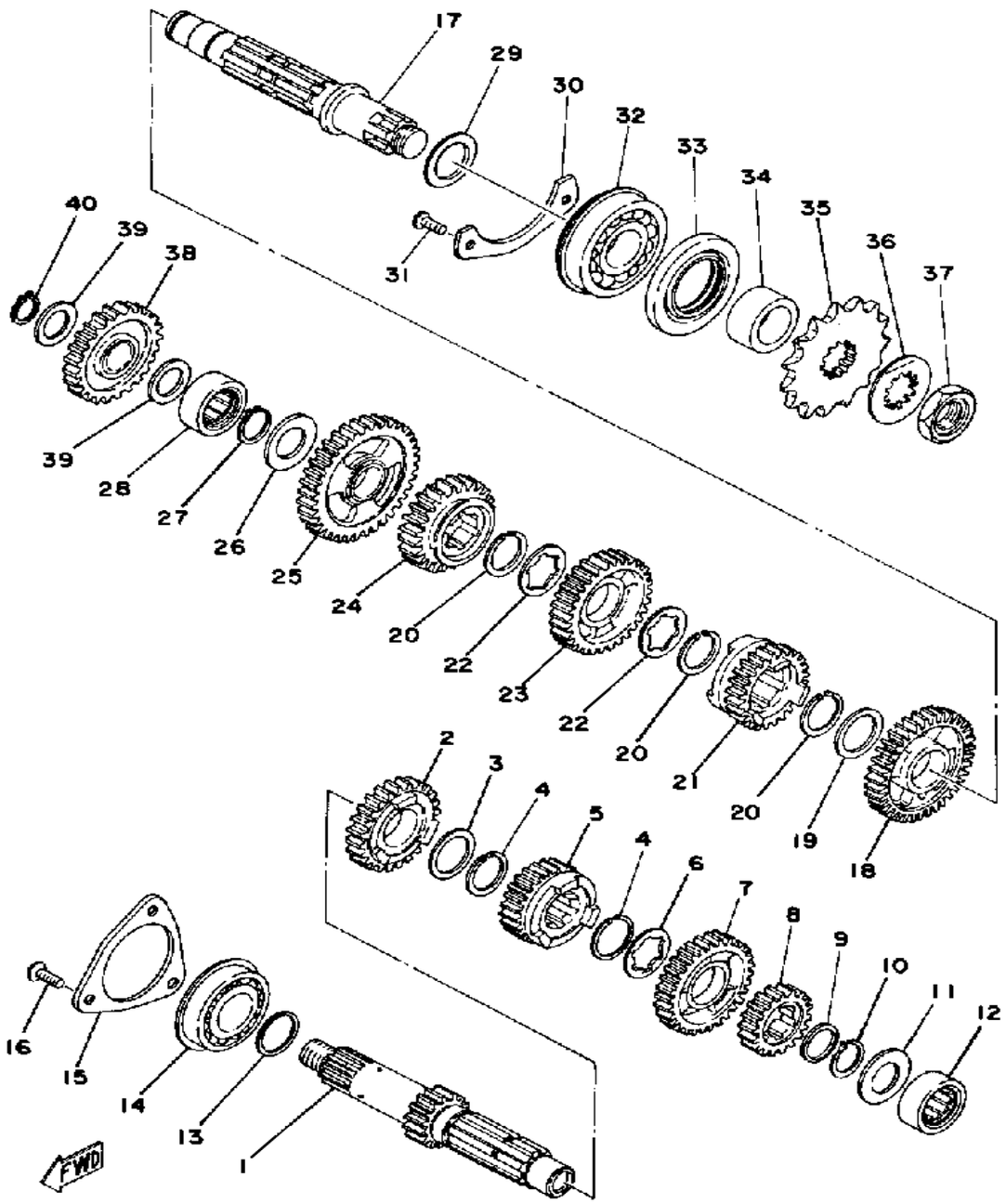

TRANSMISSION

Ref. No.	Part Number	Description	Qty	Remarks
28	93311-62035-00	BEARING, CYLINDRICAL	1	
29	168-17428-01-03	SHIM 2 (25-34-0.3)	1	U.R.
	168-17428-01-05	SHIM 2 (25-34-0.5)	1	U.R.
30	509-15381-00-00	PLATE, BRNG COVER	1	
31	98603-06012-00	SCREW, OVAL HEAD (92701-06012)	2	
32	93306-30517-00	BEARING	1	
33	93102-35109-00	OIL SEAL (SD-35-62-6 HS)	1	
34	90387-25192-00	COLLAR	1	
35	93834-14051-00	SPROCKET, DRIVE	1	
36	90215-21239-00	WASHER, LOCK	1	
37	90179-18020-00	NUT	1	
38	(1W4-15651-00-00)	GEAR, KICK IDLE	1	
39	90201-17255-00	WASHER, PLATE	2	
40	99009-17400-00	CIRCLIP	1	

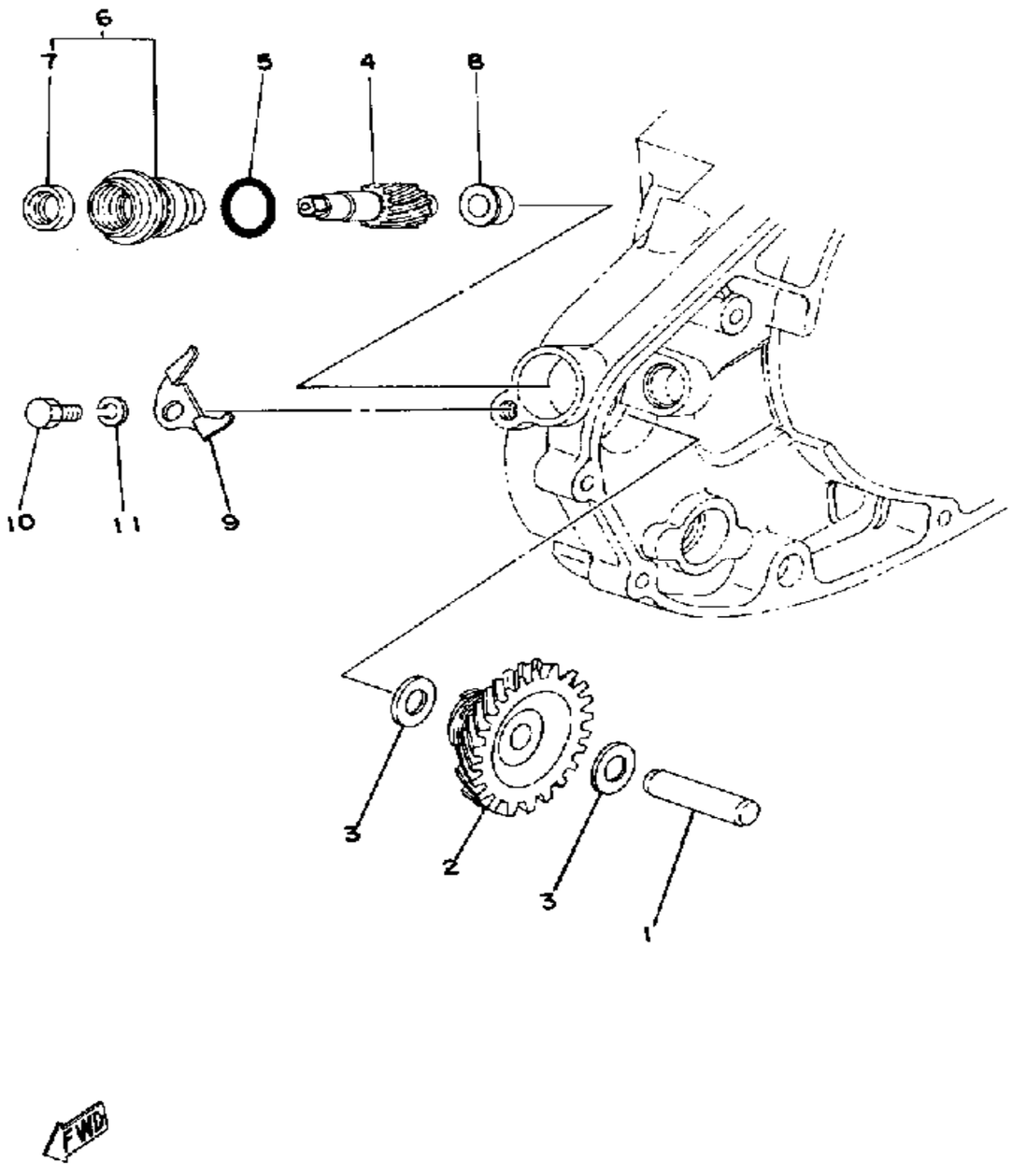

TACHOMETER GEAR

Ref. No.	Part Number	Description	Qty	Remarks
1	237-17861-00-00	AXLE, DRIVE GEAR	1	
2	1M1-17831-00-00	GEAR, DRIVE	1	
3	248-17837-00-00	SHIM	2	
4	443-17841-00-00	GEAR, DRIVEN	1	
5	93210-16314-00	O-RING	1	
6	438-17811-01-00	HOUSING, TACH GEAR	1	
7	93104-07036-00	. OIL SEAL, SO-TYPE	1	
8	90381-08002-00	BUSH, SOLID	1	
9	438-17812-00-00	STOPPER	1	
10	97013-06012-00	BOLT	1	
11	92995-06100-00	WASHER, SPRING	1	

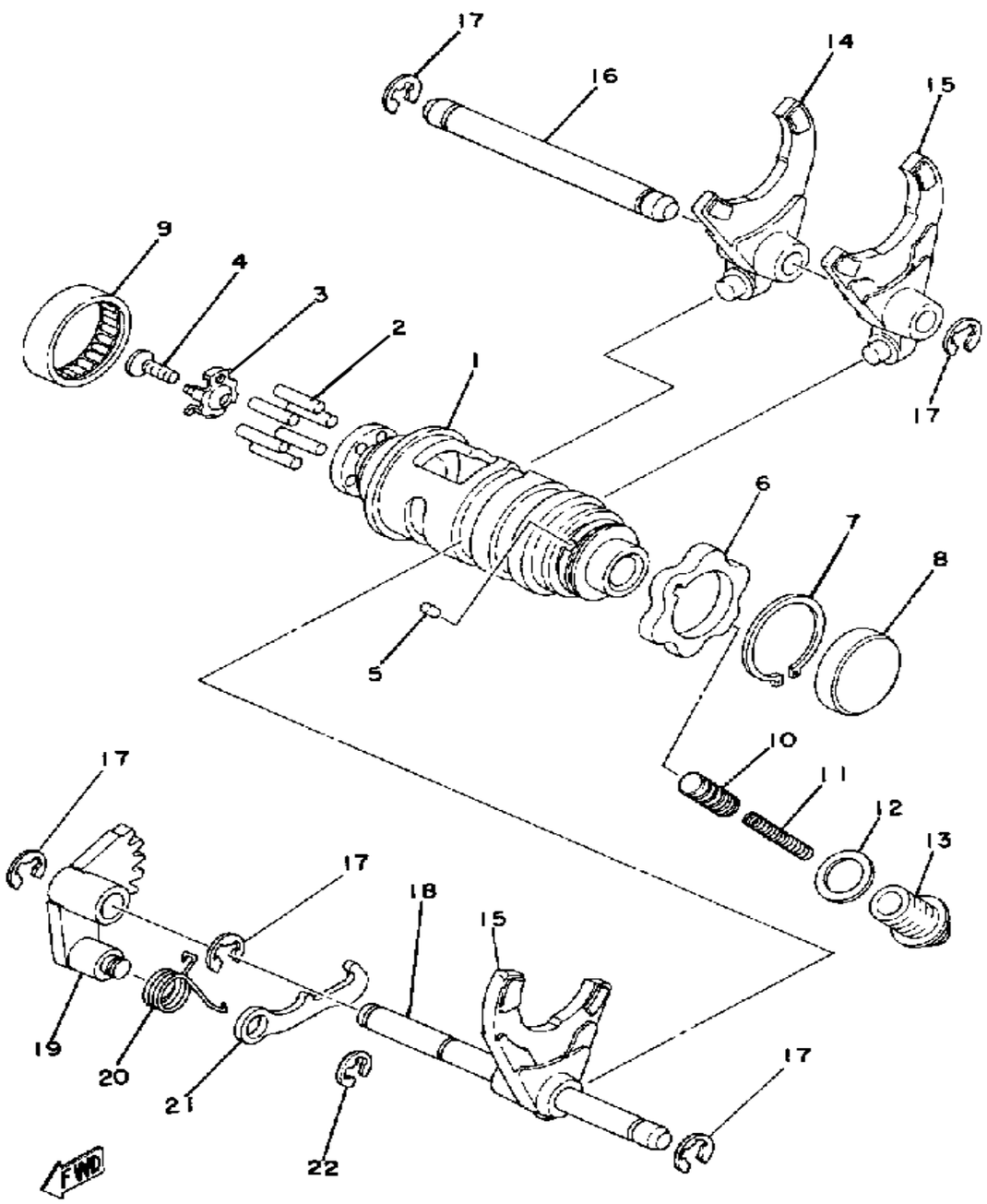

SHIFT CAM - FORK

Ref. No.	Part Number	Description	Qty	Remarks
1	1W4-18541-00-00	CAM, SHIFT	1	
2	93604-18100-00	PIN, DOWEL	6	
3	434-18561-00-00	PLATE, SIDE 1	1	
4	98701-05012-00	SCREW, FLAT HEAD	1	
5	93604-08071-00	PIN, DOWEL	1	
6	1E6-18141-01-00	PLATE, STOPPER	1	
7	99009-30400-00	CIRCLIP	1	
8	90338-22030-00	PLUG, SPEC''L SHAPE (168-18149-01)	1	
9	93315-23208-00	BEARING, CYLINDER.# 5	1	
10	353-18547-00-00	STOPPER, CAM	1	
11	90501-10062-00	SPRING, COMPRESSION	1	
12	137-15353-00-00	GASKET, DRAIN	1	
13	90109-14485-00	BOLT	1	
14	99999-01610-00	FORK, SHIFT 1	1	
15	99999-01609-00	FORK, SHIFT 2	2	
16	363-18535-00-00	BAR, SHIF FRK GDE 2	1	
17	99001-08600-00	CIRCLIP	5	
18	1M1-18531-00-00	BAR, SHIF FRK GDE 1	1	
19	434-18122-00-00	LEVER, SHIFT 2	1	
20	90508-08334-00	SPRING, TORSION	1	
21	498-18151-03-00	LEVER, SHIFT 3	1	
22	99080-07600-00	CIRCLIP	1	

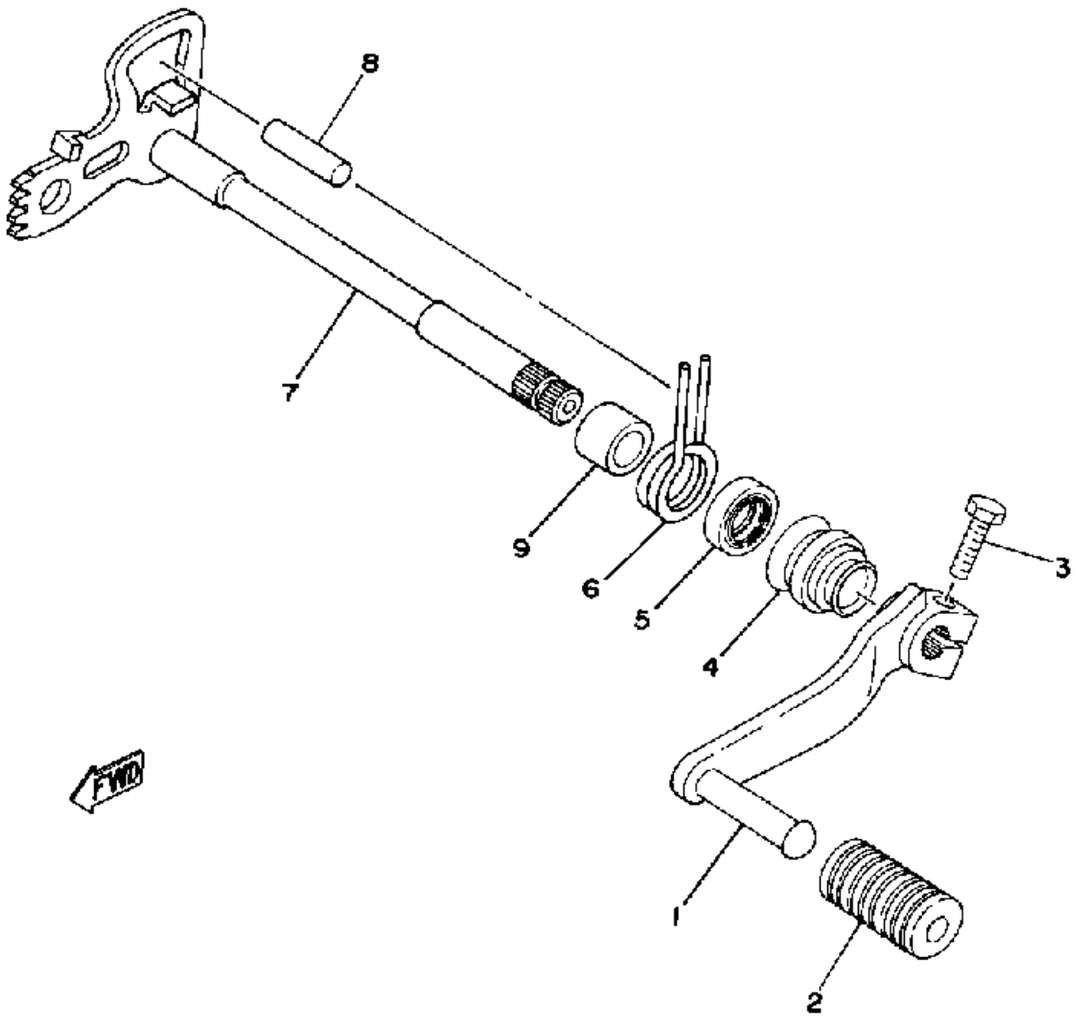

SHIFT SHAFT

Ref. No.	Part Number	Description	Qty	Remarks
1	1M1-18111-01-00	PEDAL, SHIFT	1	YAMAHA BLACK
2	132-18113-01-00	COVER, SHIFT PEDAL	1	
3	97011-06020-00	BOLT	1	
4	214-18131-00-00	BOOT, SEALING	1	
5	93102-12321-00	OIL SEAL, SD-TYPE	1	
6	90508-32318-00	SPRING, TORSION	1	
7	1M1-18101-01-00	SHIFT SHAFT ASSEMBLY 1	1	
8	93608-30152-00	PIN, DOWEL	1	
9	90560-12171-00	SPACER	1	

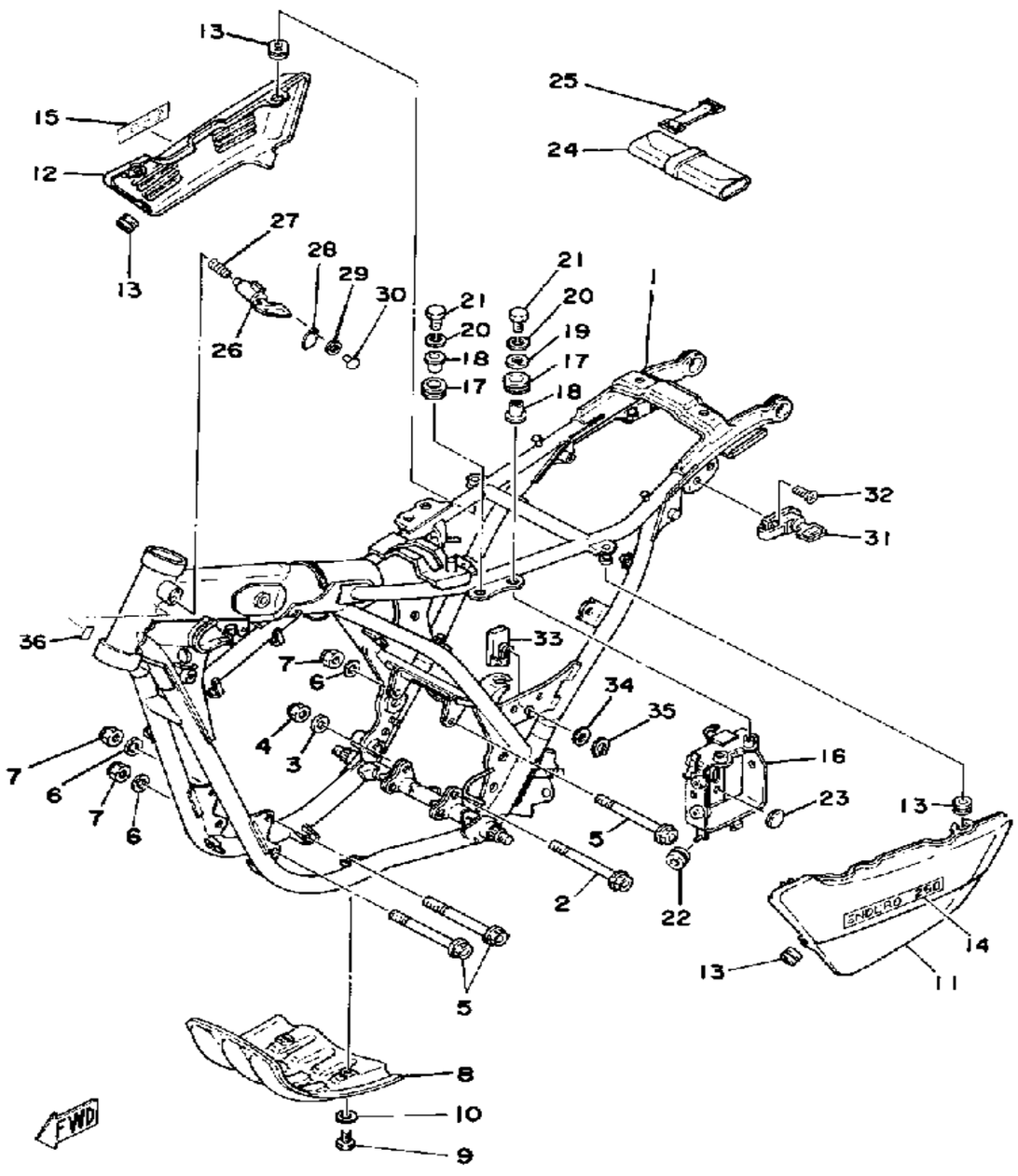

FRAME - SIDE COVER

Ref. No.	Part Number	Description	Qty	Remarks
1	(2N6-21110-00-33)	FRAME	1	YAMAHA BLACK
2	90105-10050-00	BOLT, WASHER BASED	1	
3	92990-10200-00	WASHER, PLAIN	1	
4	90185-10060-00	NUT, SELF-LOCKING	1	
5	90105-08024-00	BOLT, WASHER BASED	3	
6	92990-08200-00	WASHER, PLAIN	3	
7	90185-08089-00	NUT, SELF-LOCKING	3	
8	1M1-21471-00-90	PROTECTOR, ENGINE	1	YAMAHA BLACK
9	97013-06012-00	BOLT	4	
10	90201-061A5-00	WASHER, PLATE	4	
11	(2N6-21711-00-01)	COVER, SIDE 1	1	COMP. YELLOW/ LOW GLOSS BLK
12	2N6-21721-00-26	COVER, SIDE 2	1	COMP. YELLOW
13	90480-12053-00	GROMMET	6	
14	(2N6-21787-00-00)	EMBLEM 7	1	
15	(2N6-21786-00-00)	EMBLEM 6	1	
16	(1M1-21240-00-00)	BOX, BATT.	1	
17	90480-14023-00	GROMMET	2	
18	90387-07391-00	COLLAR	2	
19	90201-06067-00	WASHER, PLATE	1	
20	92995-06100-00	WASHER, SPRING	2	
21	97011-06025-00	BOLT (97001-06025)	2	
22	90480-01176-00	GROMMET	1	
23	371-82121-00-00	PAD, BATTERY	4	
24	2A6-W2810-00-00	TOOL KIT	1	
25	21V-21376-00-00	BAND, TOOL	1	
26	2A6-23408-00-00	STEERING LOCK ASSEMBLY	1	
27	90502-09024-00	SPRING, CONICAL	1	
28	3DM-23484-00-00	CAP, HANDLE LOCK	1	

CONTINUED ON NEXT FRAME ➤

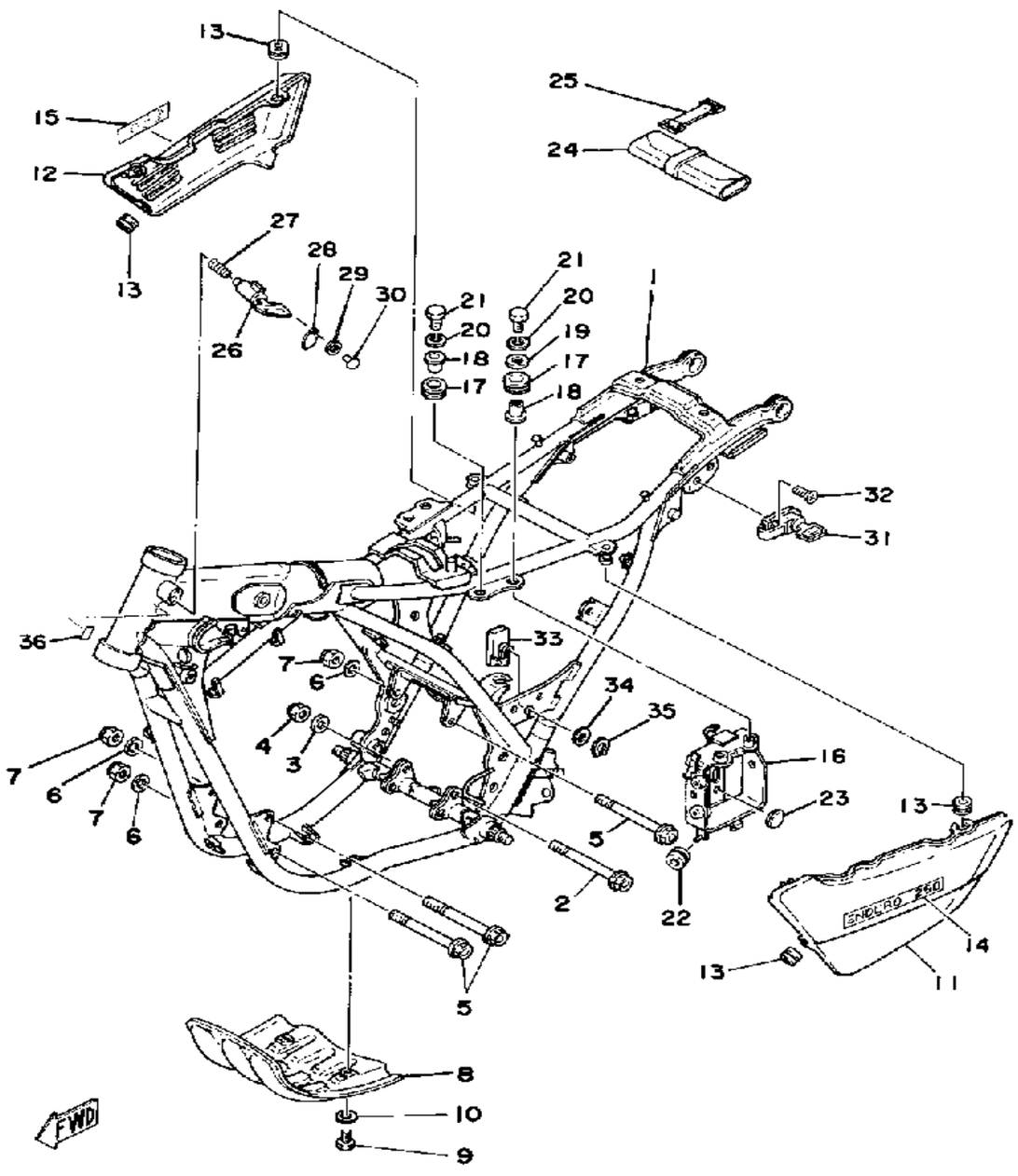

FRAME - SIDE COVER

Ref. No.	Part Number	Description	Qty	Remarks
29	90206-04003-00	WASHER, WAVE (214-23488-00)	1	
30	90269-04003-00	RIVET	1	
31	55E-21308-00-00	HELMET HANGER ASSEMBLY	1	
32	98603-06018-00	SCREW, OVAL HEAD	1	
33	583-22147-01-00	PORTECTOR, CHAIN	1	
34	90206-15023-00	WASHER, WAVE	1	
35	99009-15400-00	CIRCLIP	1	
36	(2F5-21811-01-00)	PLATE	1	

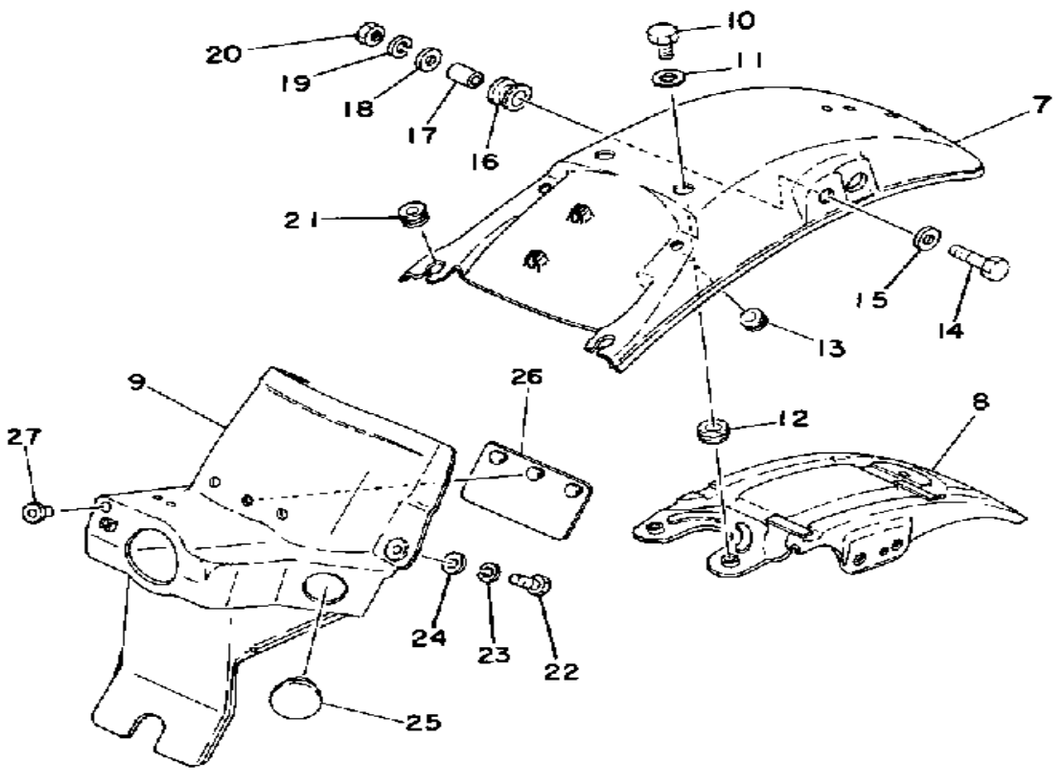

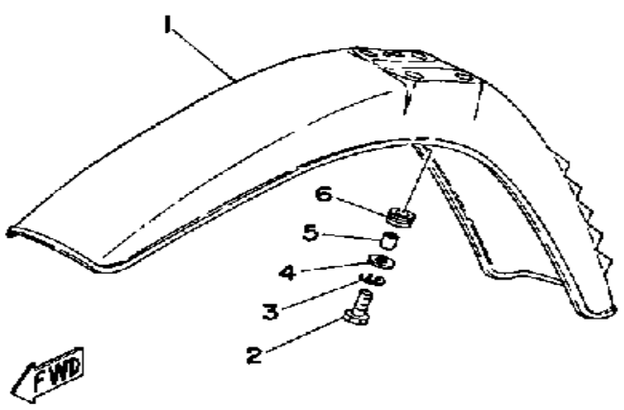

FENDER

Ref. No.	Part Number	Description	Qty	Remarks
1	2N6-21511-00-26	FENDER, FRONT	1	COMP. YELLOW
2	97011-06025-00	BOLT (97001-06025)	4	
3	92995-06100-00	WASHER, SPRING	4	
4	90201-06067-00	WASHER, PLATE	4	
5	90387-06388-00	COLLAR	4	
6	90480-14198-00	GROMMET	4	
7	(2N6-21611-00-26)	FENDER, REAR	1	COMP. YELLOW
8	1R7-21617-00-00	BRACKET, FENDER	1	
9	(1M2-21620-02-00)	GUARD, MUD	1	
10	97011-06020-00	BOLT	2	
11	90201-06067-00	WASHER, PLATE	2	
12	90480-15058-00	GROMMET	2	
13	90480-10208-00	GROMMET	2	
14	97313-08030-00	BOLT, HEXAGON	2	
15	90209-09155-00	WASHER, SPEC''L SHAP	2	
16	565-14747-00-00	DAMPER, MUFFLER	2	
17	90387-08258-00	COLLAR	2	
18	92990-08200-00	WASHER, PLAIN	2	
19	92990-08100-00	WASHER, SPRING	2	
20	95333-08600-00	NUT	2	
21	90480-12053-00	GROMMET	2	
22	97301-06014-00	BOLT, HEXAGON	3	
23	92995-06100-00	WASHER, SPRING	3	
24	90201-06067-00	WASHER, PLATE	3	
25	(90480-01230-00)	GROMMET	2	
26	1M1-21621-00-00	FLAP	1	
27	(395-21638-00-00)	DAMPER 1	1	

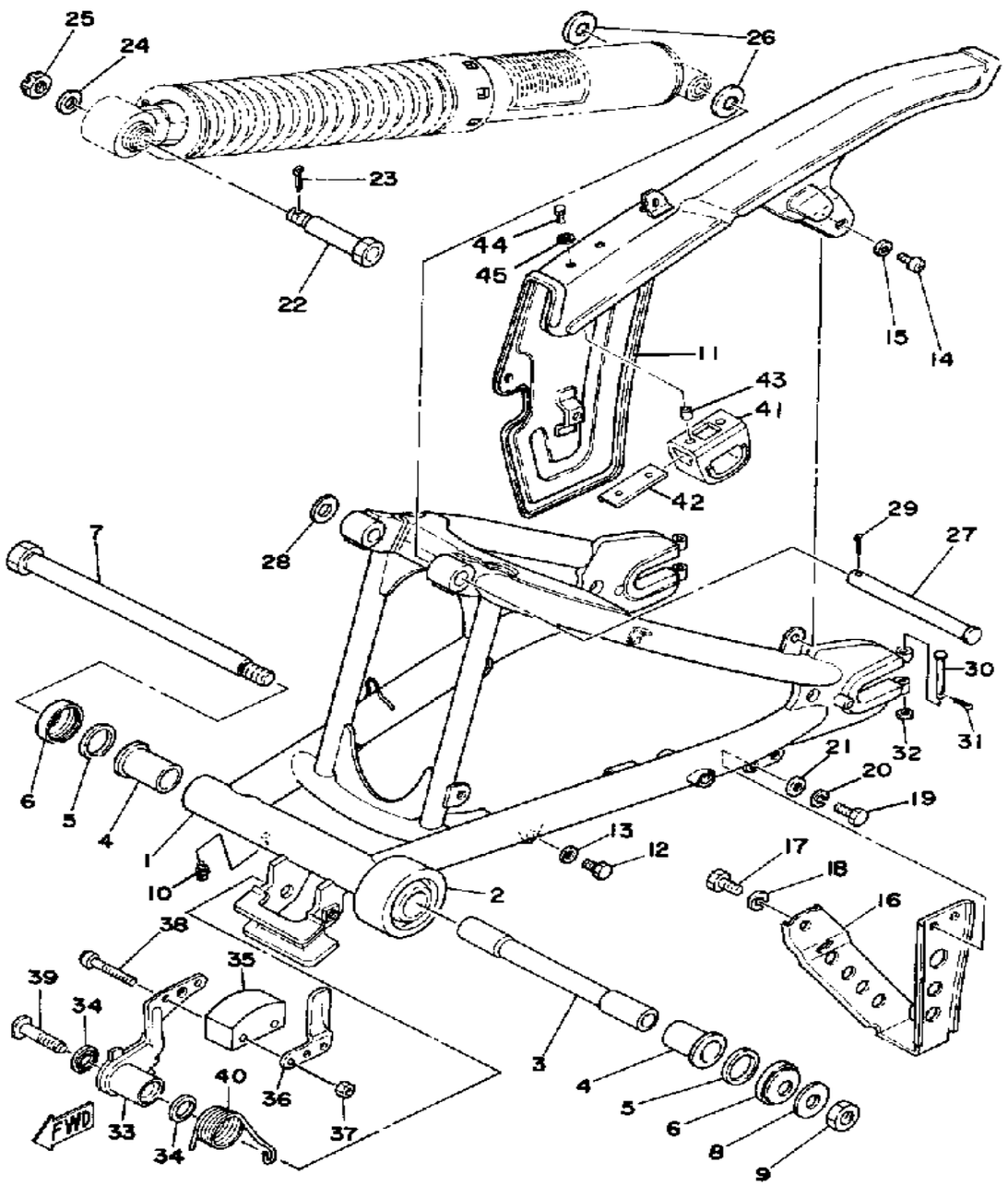

REAR ARM - CHAIN CASE

Ref. No.	Part Number	Description	Qty	Remarks
1	(2N6-22110-00-33)	REAR ARM	1	YAMAHA BLACK
2	1M1-22151-00-00	SEAL, GUARD	1	
3	90387-16398-00	COLLAR (322-22124-00)	1	
4	3Y1-22184-01-00	BUSH	2	
5	240-22127-00-00	SHIM (0.3T)	1	
6	322-22128-01-00	COVER, THRUST 1	2	
7	2N6-22141-00-00	SHAFT, PIVOT	1	
8	90201-14218-00	WASHER, PLATE	1	
9	95601-14100-00	NUT, U (95602-14100-00)	1	
10	93700-06M03-00	NIPPLE, GREASE	1	
11	4E7-22311-00-33	CASE, CHAIN	1	YAMAHA BLACK
12	97313-05010-00	BOLT, HEXAGON	1	
13	92901-05600-00	WASHER, PLATE	1	
14	98580-05010-00	SCREW, PAN HEAD	3	
15	92901-05600-00	WASHER, PLATE	3	
16	1M1-22318-00-00	GUARD, CHAIN	1	
17	97011-08016-00	BOLT	1	
18	92990-08100-00	WASHER, SPRING	1	
19	97313-06016-00	BOLT	2	
20	92995-06100-00	WASHER, SPRING	2	
21	90201-061A5-00	WASHER, PLATE	2	
22	90109-10550-00	BOLT	1	
23	91490-20025-00	PIN, COTTER (91490-20020-00)	1	
24	92990-10200-00	WASHER, PLAIN	1	
25	95303-10900-00	NUT, SLOTTED	1	
26	1W1-22128-00-00	COVER, THRUST 1	2	
27	90240-12059-00	PIN, CLEVIS	1	
28	92990-12600-00	WASHER, PLATE	1	
29	91401-30030-00	PIN, COTTER	1	

CONTINUED ON NEXT FRAME ➤

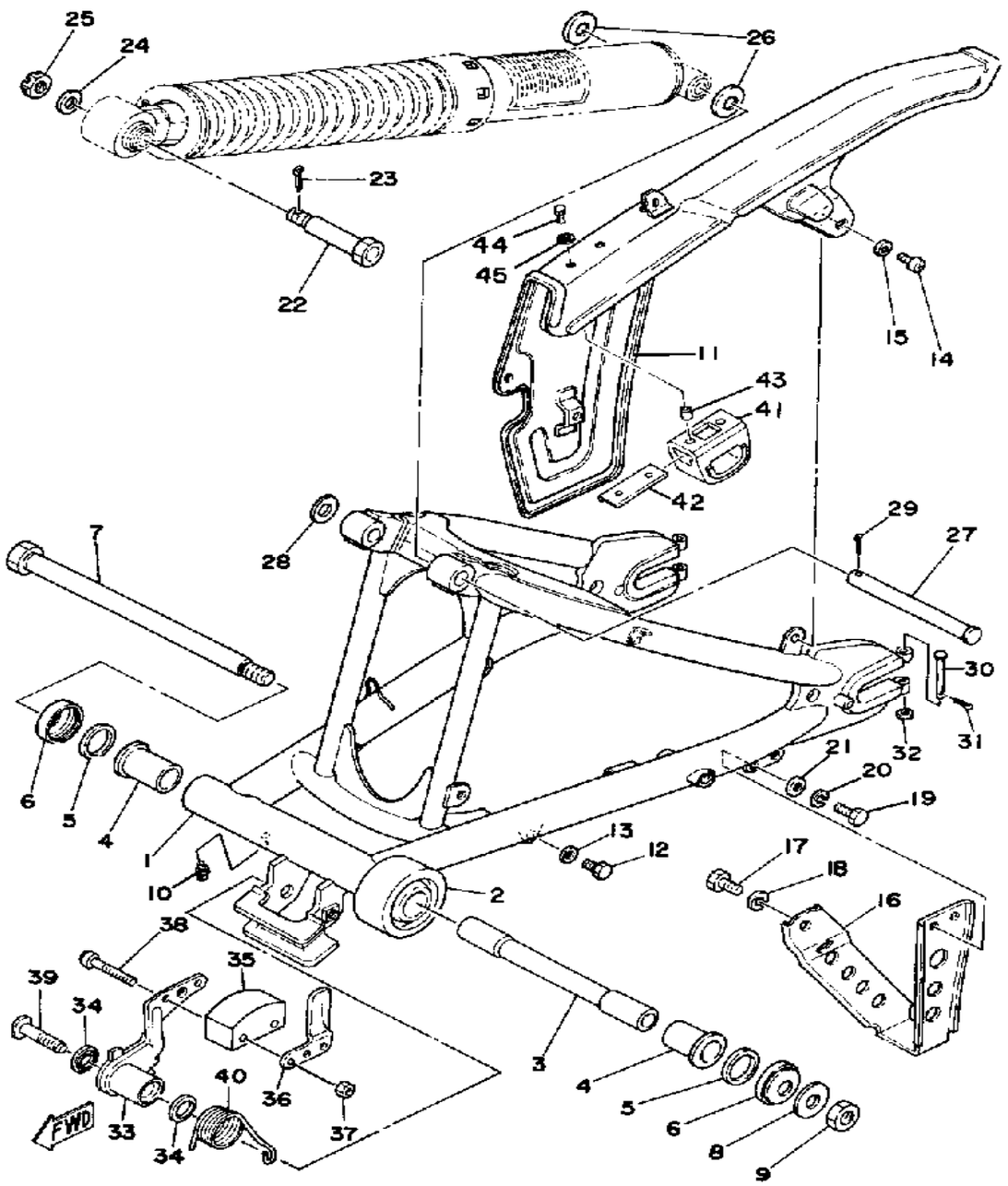

REAR ARM - CHAIN CASE

Ref. No.	Part Number	Description	Qty	Remarks
30	91701-06042-00	PIN, CLEVIS	2	
31	91490-20020-00	PIN, COTTER (91401-20020-00)	2	
32	90201-061A5-00	WASHER, PLATE	2	
33	1M1-22179-00-00	ARM, TENSIONER	1	
34	93104-14044-00	OIL SEAL	2	
35	ACC-11130-00-25	TENSIONER (2N0-22178-00-00)	1	
36	1M1-22187-00-00	GUIDE, CHAIN	1	
37	95311-05700-00	NUT	2	
38	98501-05035-00	SCREW, PAN HEAD	2	
39	90109-10483-00	BOLT (90109-10533-00)	1	
40	90508-35350-00	SPRING, TORSION	1	
41	3J0-22147-00-00	PORTECTOR, CHAIN	1	
42	3J0-22131-00-00	STAY, CHAIN CASE 1	1	
43	90387-05679-00	COLLAR	2	
44	97313-05016-00	BOLT, HEXAGON	2	
45	92901-05600-00	WASHER, PLATE	2	

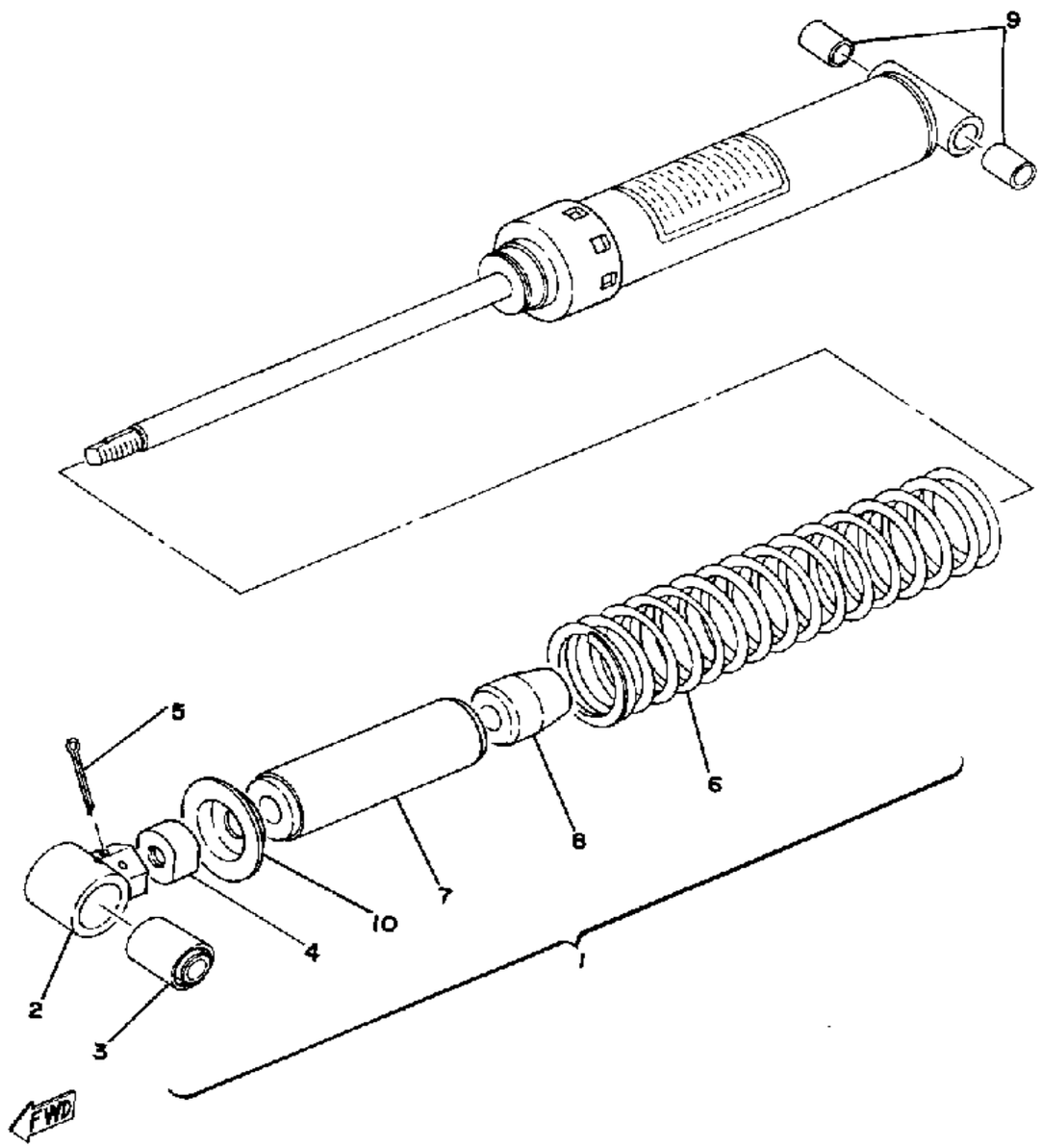

REAR SUSPENSION

Ref. No.	Part Number	Description	Qty	Remarks
1	(2N6-22210-00-00)	SHK/ABS ASSEMBLY, REAR .	1	
2	(1M1-22219-01-00)	BRACKET, UPPER	1	
3	1M1-22216-00-00	. BUSH, REAR SHOCK ABSORBER	1	
4	(2N4-22213-00-00)	SEAT, SPRING UPPER	1	
5	91401-30040-00	. PIN, COTTER	1	
6	(90501-90536-00)	SPRING, COMPRESSION	1	
7	(2N4-22496-00-00)	SLEEVE, ROD	1	
8	(2A6-22493-00-00)	BUMP, STOP	1	
9	90380-12051-00	. BUSH, SOLID	2	
10	(2N4-22214-00-00)	GUIDE, SPRING 1	1	

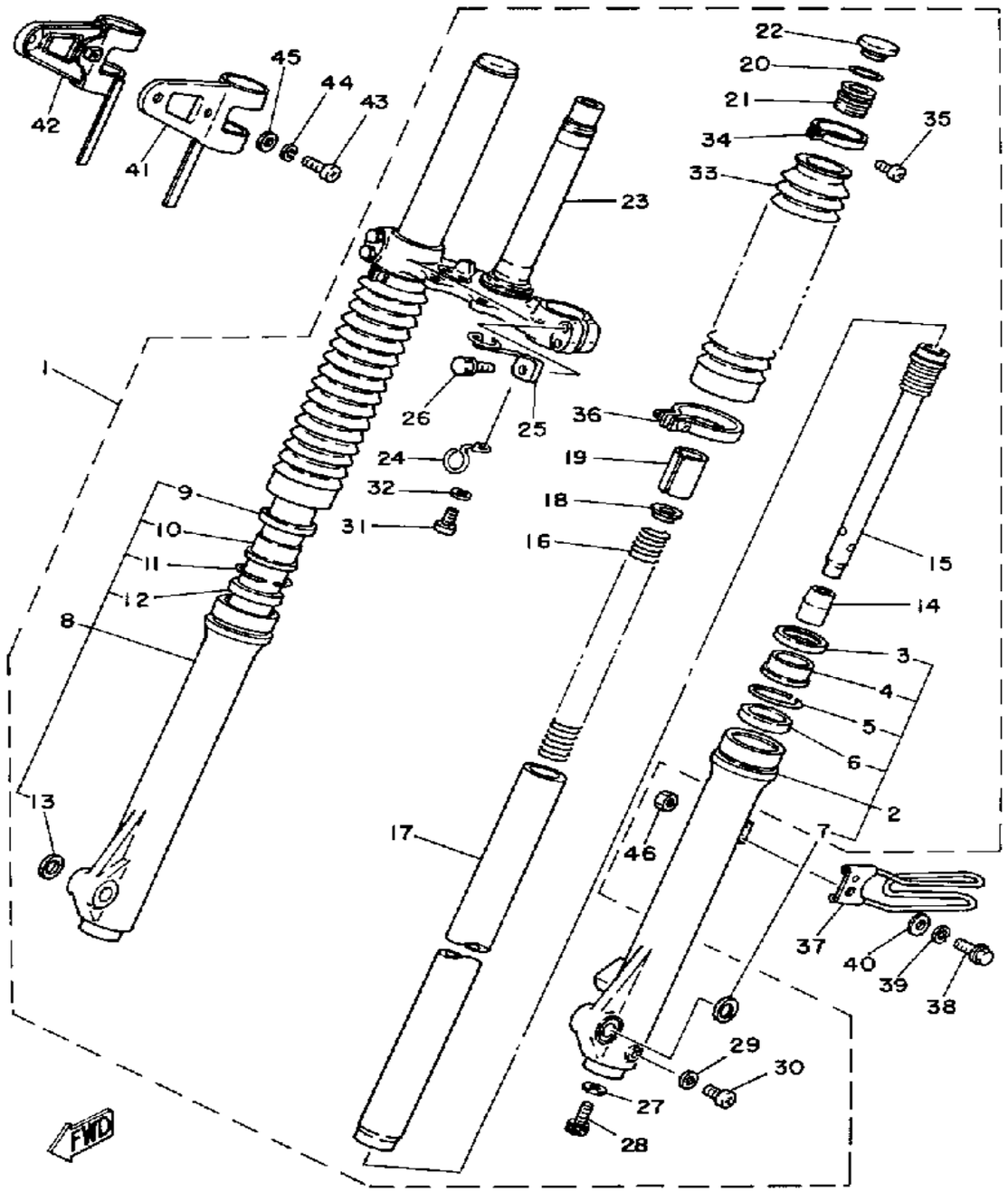

FRONT FORK

Ref. No.	Part Number	Description	Qty	Remarks
1	(2N6-23101-00-00)	FRONT FORK ASSEMBLY	1	
2	(2N6-23126-00-00)	TUBE, OUTER 1	1	
3	99999-01510-00	. . COVER, DUST SEAL	1	
4	1G8-23144-L1-00	. . SEAL, DUST	1	
5	48Y-23145-00-00	. . OIL SEAL	1	
6	48Y-23145-00-00	. . OIL SEAL	1	
7	1W1-23168-L0-00	. . CAP, FRONT FORK	1	
8	(2N6-23136-00-00)	TUBE, OUTER 2	1	
9	99999-01510-00	. . COVER, DUST SEAL	1	
10	1G8-23144-L1-00	. . SEAL, DUST	1	
11	48Y-23145-00-00	. . OIL SEAL	1	
12	48Y-23145-00-00	. . OIL SEAL	1	
13	1W1-23168-L0-00	. . CAP, FRONT FORK	1	
14	1W1-23173-L0-00	. SPINDLE, TAPER	2	
15	(2N6-23170-00-00)	CYLINDER, FRTFRK	2	
16	(2N6-23141-00-00)	SPRING, FRONT FORK	2	
17	(2N6-23110-00-00)	INNER TUBE 1	2	
18	583-23142-00-00	. SEAT, SPRING UPPER	2	
19	(1W2-23118-10-00)	SPACER	2	
20	240-23114-00-00	. GASKET	2	
21	1U6-23111-M1-00	. BOLT, CAP (1U6-23111-M0) ..	2	
22	1U6-23168-M1-00	. CAP, FRONT FORK	2	
23	4E7-23340-30-33	. UNDER BRACKET (2N6-23340-00-33)	1	YAMAHA BLACK
24	(2N6-23319-00-00)	HOLDER, CABLE 2	1	
25	(2N4-23317-00-00)	HOLDER, CABLE	1	
26	18G-23128-00-00	. BOLT, W/WASHER	4	
27	509-23158-L0-00	. GASKET	2	
28	278-23181-50-00	. BOLT, HEXAGON SOCKET HEAD	2	

CONTINUED ON NEXT FRAME ➤

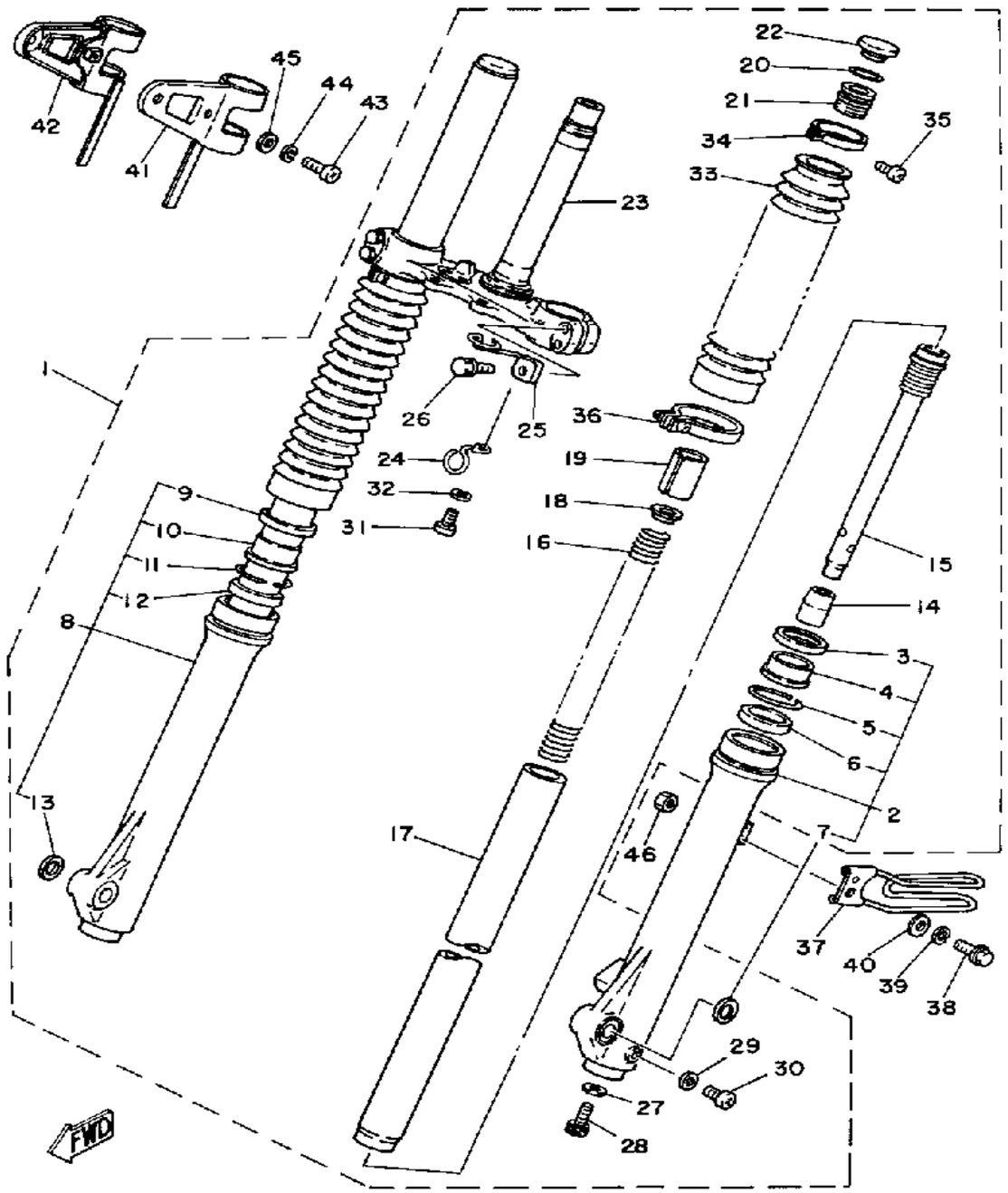

FRONT FORK

Ref. No.	Part Number	Description	Qty	Remarks
29	122-23129-00-00	. GASKET, DRAIN PLUG	2	
30	4H7-23119-00-00	. PLUG, DRAIN	2	
	98580-04008-00	. SCREW, PAN HEAD	2	
31	98580-06010-00	. SCREW, PAN HEAD	1	
32	92995-06100-00	. WASHER, SPRING	1	
33	2N6-23191-00-00	. BOOT, FRONT FORK	2	
34	341-92090-60-00	. BAND, BOOT	2	
35	509-23194-L0-00	. SCREW, BOOT BAND	2	
36	1W1-23318-L0-00	. HOLDER, CABLE 1	1	
37	2N6-23318-00-00	HOLDER, CABLE 1	1	
38	95811-06020-00	BOLT, FLANGE	1	
39	92995-06100-00	WASHER, SPRING	1	
40	92990-06200-00	WASHER, PLAIN	1	
41	(2N6-84118-00-00)	STAY, HEADLIGHT 1	1	YAMAHA BLACK
42	(2N6-84119-00-33)	STAY, HEADLIGHT 2	1	YAMAHA BLACK
43	98580-06020-00	SCREW, PAN HEAD	2	
44	92995-06100-00	WASHER, SPRING	2	
45	90201-061A5-00	WASHER, PLATE	2	
46	95380-06600-00	NUT, HEXAGON	1	

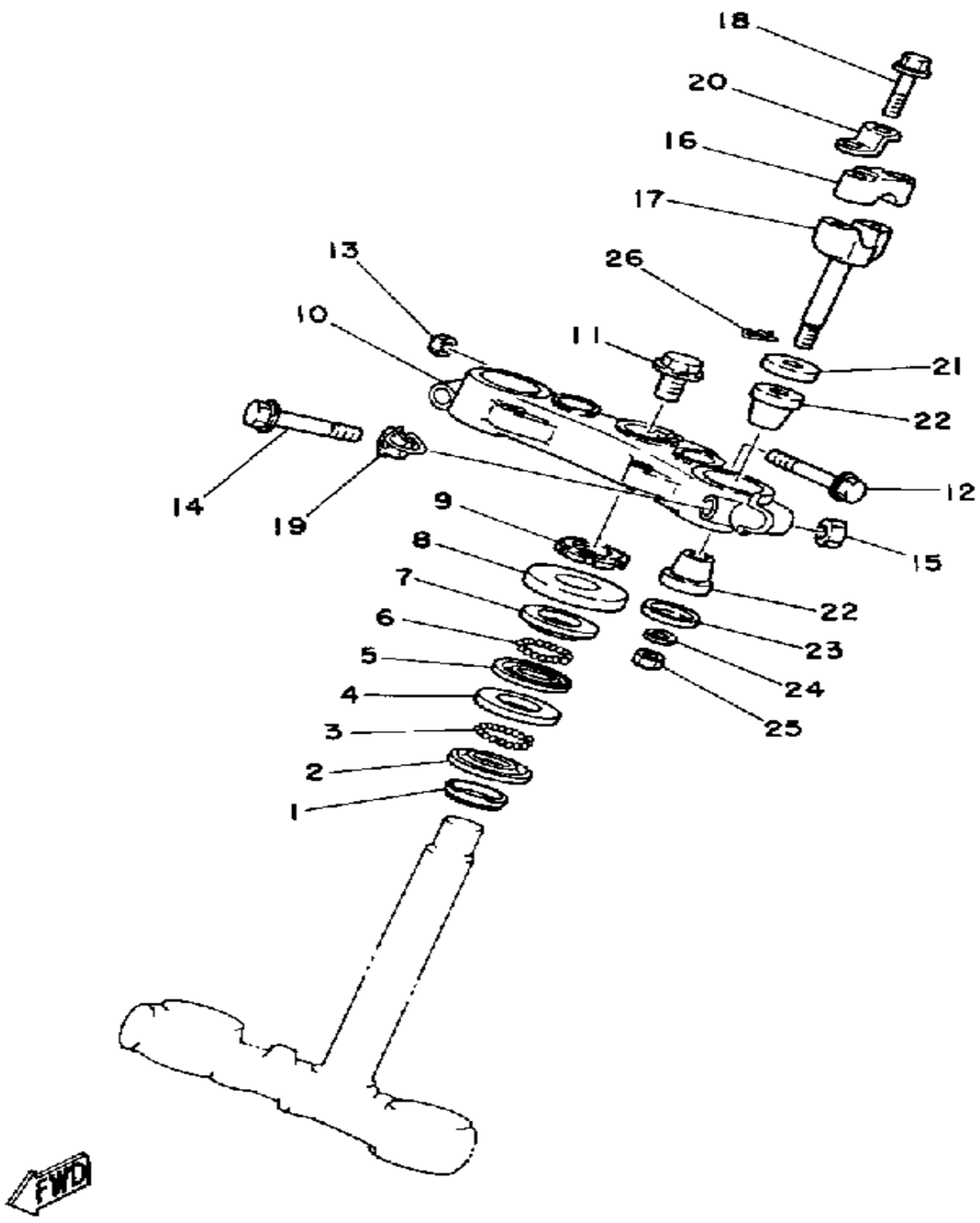

STEERING

Ref. No.	Part Number	Description	Qty	Remarks
1	164-23462-00-00	SEAL, STEERING	1	
2	156-23411-00-00	RACE, BALL 1	1	
3	93501-04011-00	BALL	19	
4	156-23412-00-00	RACE, BALL 2	1	
5	22F-23412-01-00	RACE, BALL 2	1	
6	93503-16010-00	BALL 3/ 6	22	
7	22F-23411-01-00	RACE, BALL 1	1	
8	10V-23416-01-00	COVER, BALL RACE 2	1	
9	90179-25033-00	NUT	1	
10	(2N6-23435-00-98)	CROWN, HANDLE	1	LOW GLOSS BLK
11	90105-14136-00	BOLT, WASHER BASED	1	
12	95811-08055-00	BOLT, FLANGE	1	
13	90185-08089-00	NUT, SELF-LOCKING	1	
14	95811-10060-00	BOLT, FLANGE (95812-10060)	2	
15	90185-10060-00	NUT, SELF-LOCKING	2	
16	1E6-23441-00-00	HOLDER, HANDLE UPPER	2	LOW GLOSS BLK
17	1E6-23442-00-00	HOLDER, HANDLE LWR	2	LOW GLOSS BLK
18	95811-08035-00	BOLT, FLANGE	4	
19	(2N4-23389-00-00)	GUIDE, CABLE	1	
20	1T2-23389-00-00	GUIDE, CABLE	1	
21	90201-12195-00	WASHER, PLATE	2	
22	1E6-23434-00-00	HOLDER, DAMPER	4	
23	90201-10322-00	WASHER, PLATE	2	
24	92990-10100-00	WASHER, SPRING	2	
25	95303-10700-00	NUT	2	
26	90468-12006-00	CLIP	2	

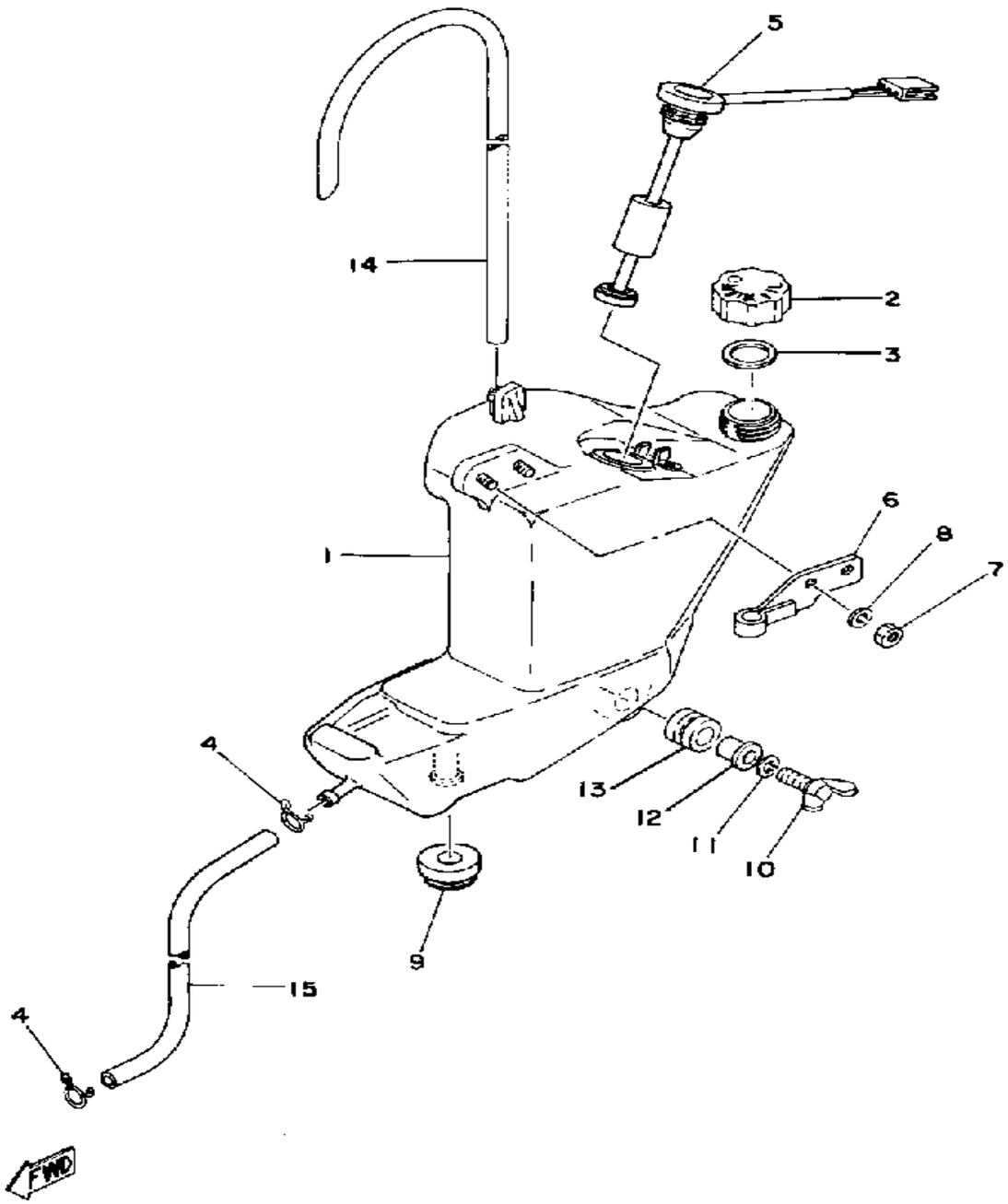

OIL TANK

Ref. No.	Part Number	Description	Qty	Remarks
1	2N6-21751-00-00	TANK, OIL	1	
2	434-21771-00-00	BODY, CAP	1	
3	90430-18067-00	GASKET	1	
4	90467-08003-00	CLIP	2	
5	40X-85720-01-00	OIL LVL GAUGE ASSEMBLY	1	
6	(1M1-21796-00-00)	HINGE	1	
7	95380-05600-00	NUT	2	
8	92990-05100-00	WASHER, SPRING	2	
9	90480-18171-00	GROMMET	1	
10	90122-06021-00	BOLT, WING (38W)	1	
11	92995-06100-00	WASHER, SPRING	1	
12	90387-07391-00	COLLAR	1	
13	90480-14023-00	GROMMET	1	
14	90445-09124-00	HOSE	1	
15	90445-09112-00	HOSE	1	

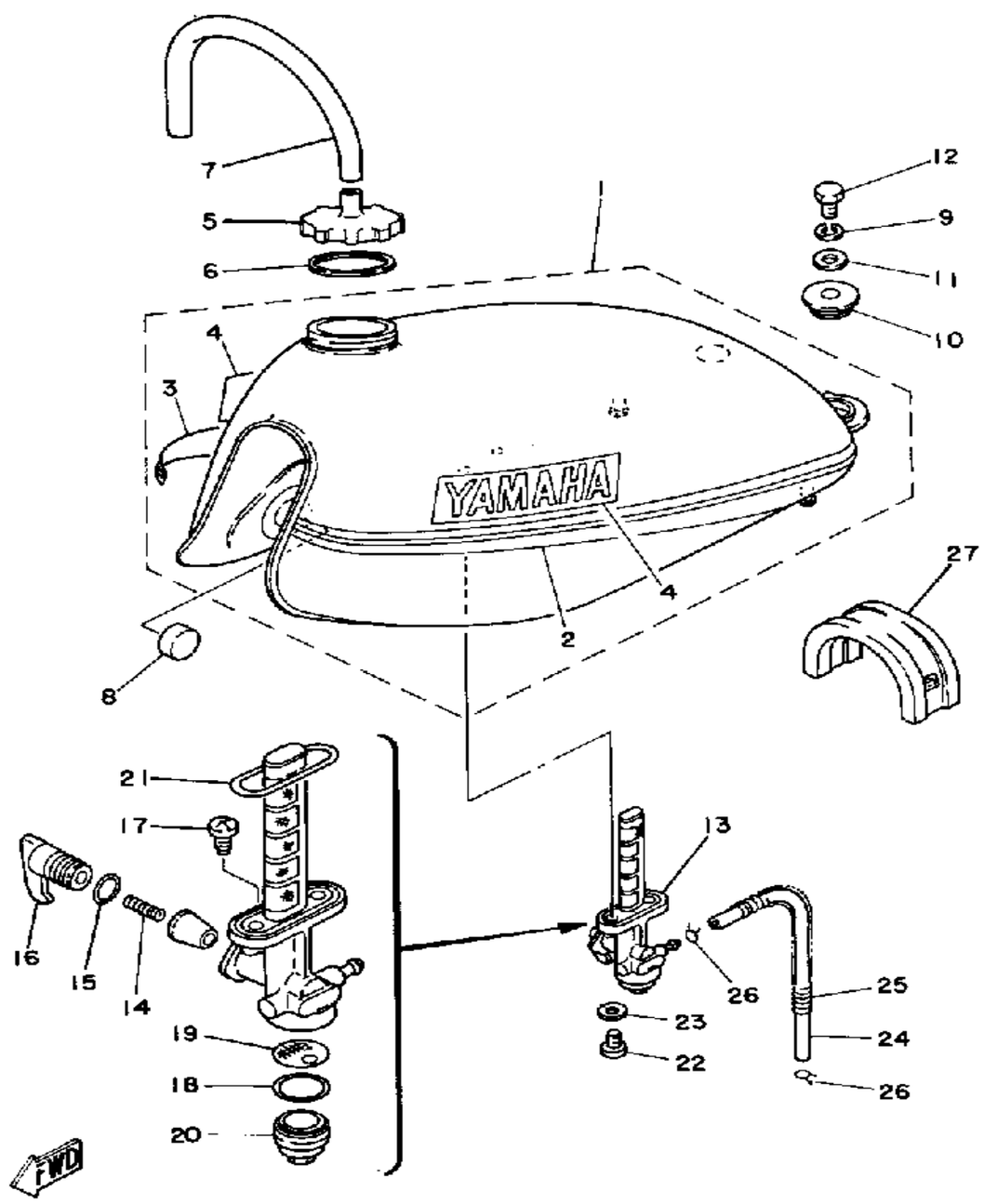

FUEL TANK

Ref. No.	Part Number	Description	Qty	Remarks
1	(2N6-24244-00-00)	GRAPHIC, FUEL TNK 1	1	COMP. YELLOW
2	(2N6-24244-00-00)	GRAPHIC, FUEL TNK 1	1	
3	(2N6-24245-00-00)	GRAPHIC, FUEL TNK 2	1	
4	99224-00035-00	. EMBLEM, YAMAHA	1	
5	2A6-24611-00-00	BODY, CAP	1	
6	1W1-24612-00-00	GASKET, CAP	1	
7	90445-09111-00	HOSE	1	
8	278-24181-00-00	DAMPER, LOCATING 1	2	
9	92995-06100-00	WASHER, SPRING	2	
10	90480-22231-00	GROMMET	2	
11	90201-06073-00	WASHER, PLATE	2	
12	97013-06012-00	BOLT	2	
13	1M1-24500-03-00	FUEL COCK ASSEMBLY 1 . . .	1	
14	1A0-24529-01-00	. SPRING	1	
15	1A0-24512-00-00	. GASKET	1	
16	1A0-24524-01-00	. LEVER, COCK	1	
17	1M1-24536-00-00	. STRAINER	1	
18	498-24522-00-00	. GASKET	1	
19	1M1-24536-00-00	. STRAINER	1	
20	1A0-24521-01-00	. CUP, FILTER	1	
21	214-24512-00-00	. GASKET	1	
22	90149-06011-00	SCREW	2	
23	90202-05187-00	WASHER, PLATE	2	
24	90445-10344-00	HOSE	1	
25	90501-08430-00	SPRING, COMPRESSION	1	
26	90467-10008-00	CLIP	2	
27	2A6-24182-00-00	DAMPER, LOCATING 2	1	

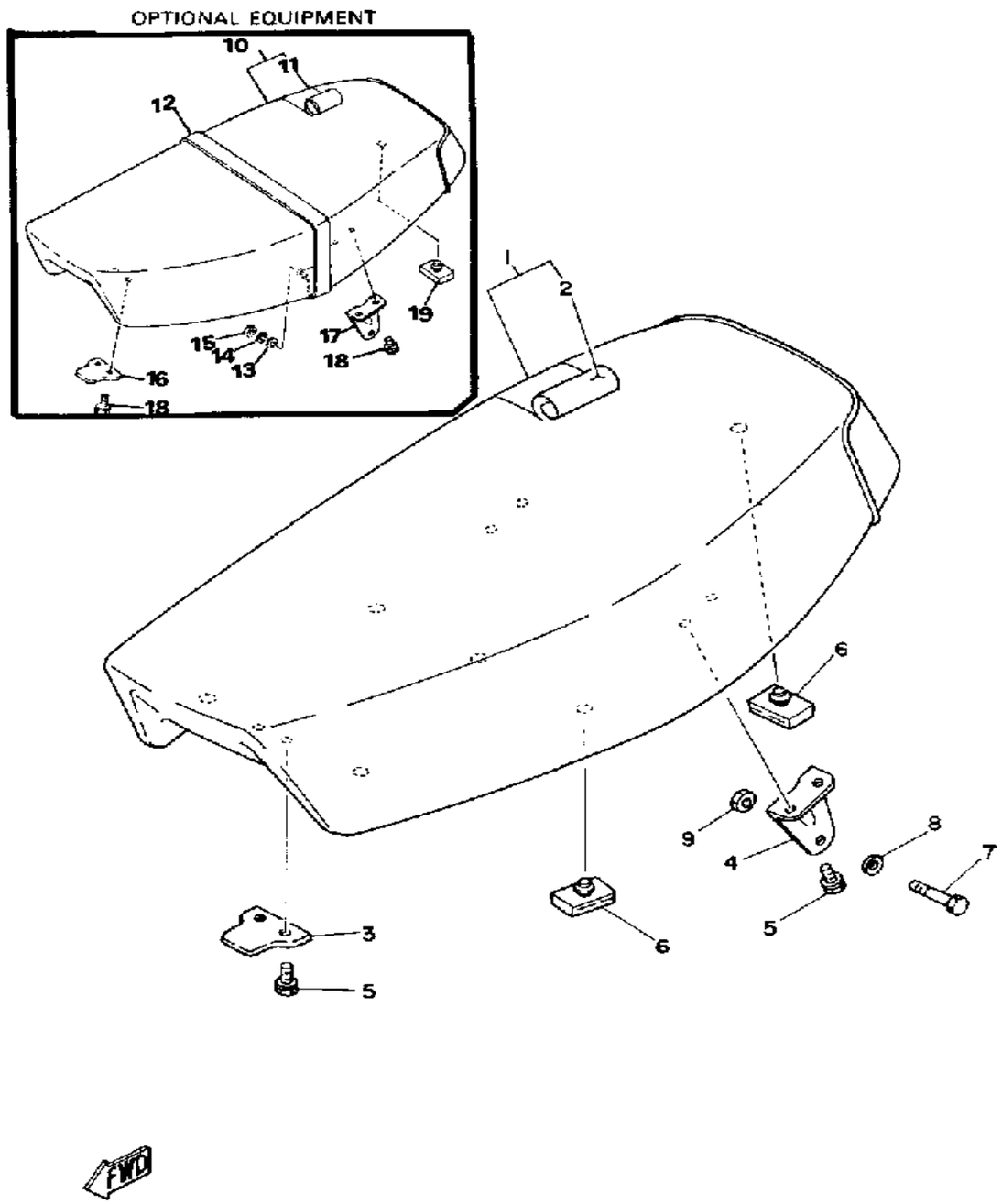

SEAT

Ref. No.	Part Number	Description	Qty	Remarks
1	2N6-24710-90-00	SINGLE SEAT ASSEMBLY . . .	1	
2	2N6-24711-00-00	. COVER, SINGLE SEAT	1	
3	1M1-24748-00-00	BRACKET, SEAT	1	
4	1M1-24738-00-00	BRACKET, SEAT	2	
5	90101-06304-00	BOLT	6	
6	214-24724-00-00	DAMPER, SEAT	6	
7	97313-06045-00	BOLT, HEXAGON	2	
8	92990-06200-00	WASHER, PLAIN	2	
	95601-06100-00	NUT, U	2	
10	2N6-11127-00-00	ABSORBER 3	1	
11	(2N6-24731-00-00)	COVER, DOUBLE SEAT	1	
12	(2N6-24734-00-00)	BAND, SEAT	1	
13	92990-08200-00	WASHER, PLAIN	2	
14	92990-08100-00	WASHER, SPRING	2	
15	95303-08700-00	NUT	2	
16	1M1-24748-00-00	BRACKET, SEAT	1	
17	1M1-24738-00-00	BRACKET, SEAT	2	
18	90101-06304-00	BOLT	6	
19	214-24724-00-00	DAMPER, SEAT	6	

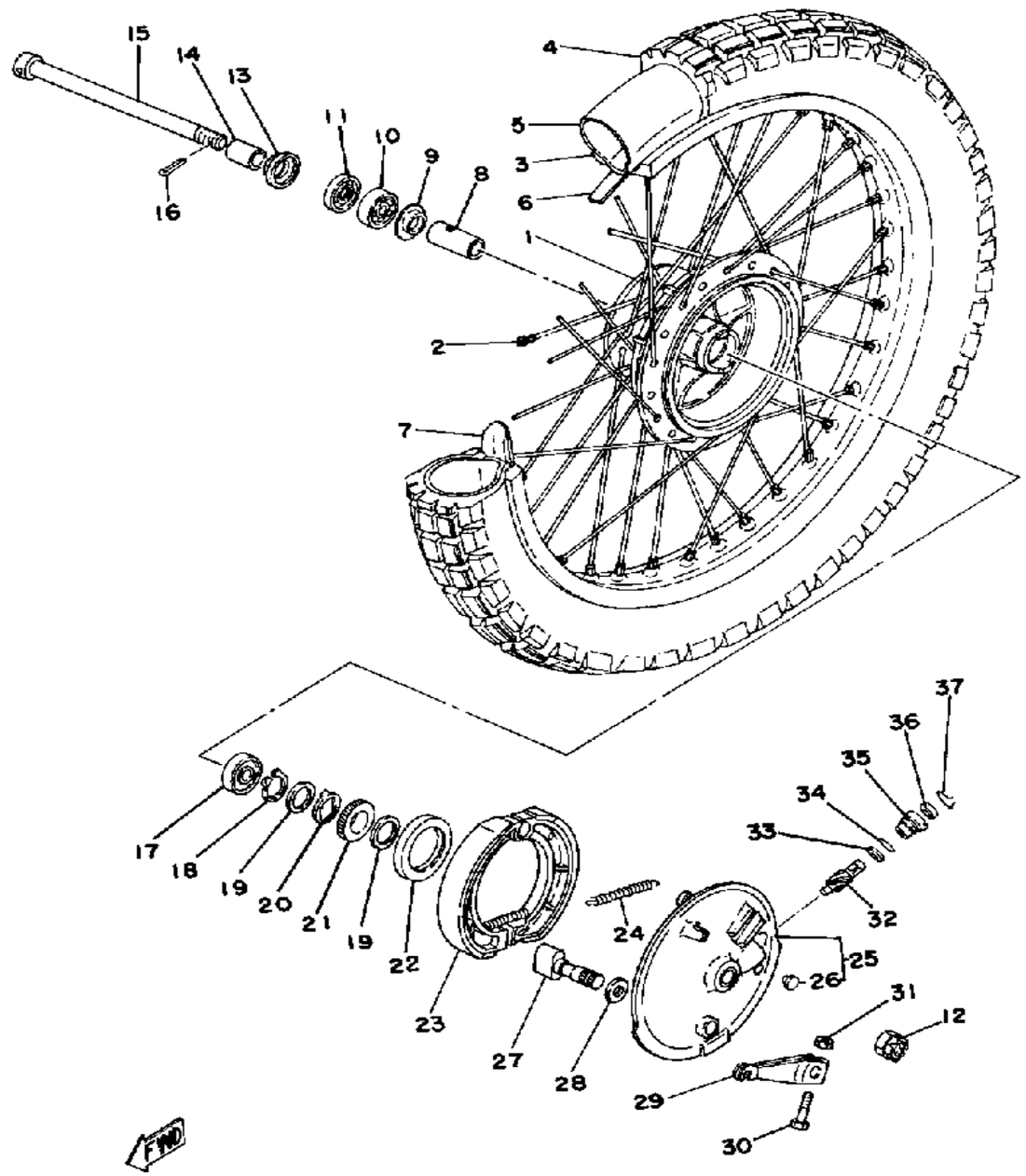

FRONT WHEEL

Ref. No.	Part Number	Description	Qty	Remarks
1	1E6-25111-00-98	HUB, FRONT	1	LOW GLOSS BLK
2	1E6-25104-01-00	SPOKE SET, FRONT	1	
3	94416-21326-00	RIM 1.60X 1	1	
4	(94130-21316-00)	300X21 DUN TRIUNI	1	
5	94227-21101-00	TUBE (80/100-21 TR4 BTL)	1	
6	(94327-21024-00)	BAND, RIM	1	
7	1T1-25194-00-00	SPACER, BEAD	1	
8	90560-15293-00	SPACER	1	
9	146-25116-00-00	FLANGE, SPACER 2	1	
10	93306-20209-00	BEARING	1	
11	93102-20009-00	OIL SEAL, SD-TYPE	1	
12	90171-14020-00	NUT, CASTLE	1	
13	322-25118-00-00	COVER, HUB DUST	1	
14	90387-15600-00	COLLAR	1	
15	403-25381-01-00	AXLE, WHEEL	1	
16	91401-30030-00	PIN, COTTER	1	
17	93306-20226-00	BEARING	1	
18	93410-22014-00	CIRCLIP, S-TYPE	2	
19	90201-22283-00	WASHER, PLATE	2	
20	214-25149-01-00	CLUTCH, METER	1	
21	308-25135-00-00	GEAR, DRIVE	1	
22	93105-50010-00	OIL SEAL, SDD-TYPE (SDD-50-62-7)	1	
23	431-W2536-00-00	BRAKESHOE SET-2PCS	2	
24	90507-20002-00	SPRING, TENSION	2	
25	2N6-25016-10-98	BRAKE SHOE PLT ASSEMBLY	1	LOW GLOSS BLK
26	90480-10068-00	. GROMMET	1	
27	1E6-25151-00-00	CAMSHAFT	1	
28	148-25353-00-00	SHIM, CAMSHAFT	1	

CONTINUED ON NEXT FRAME ➤

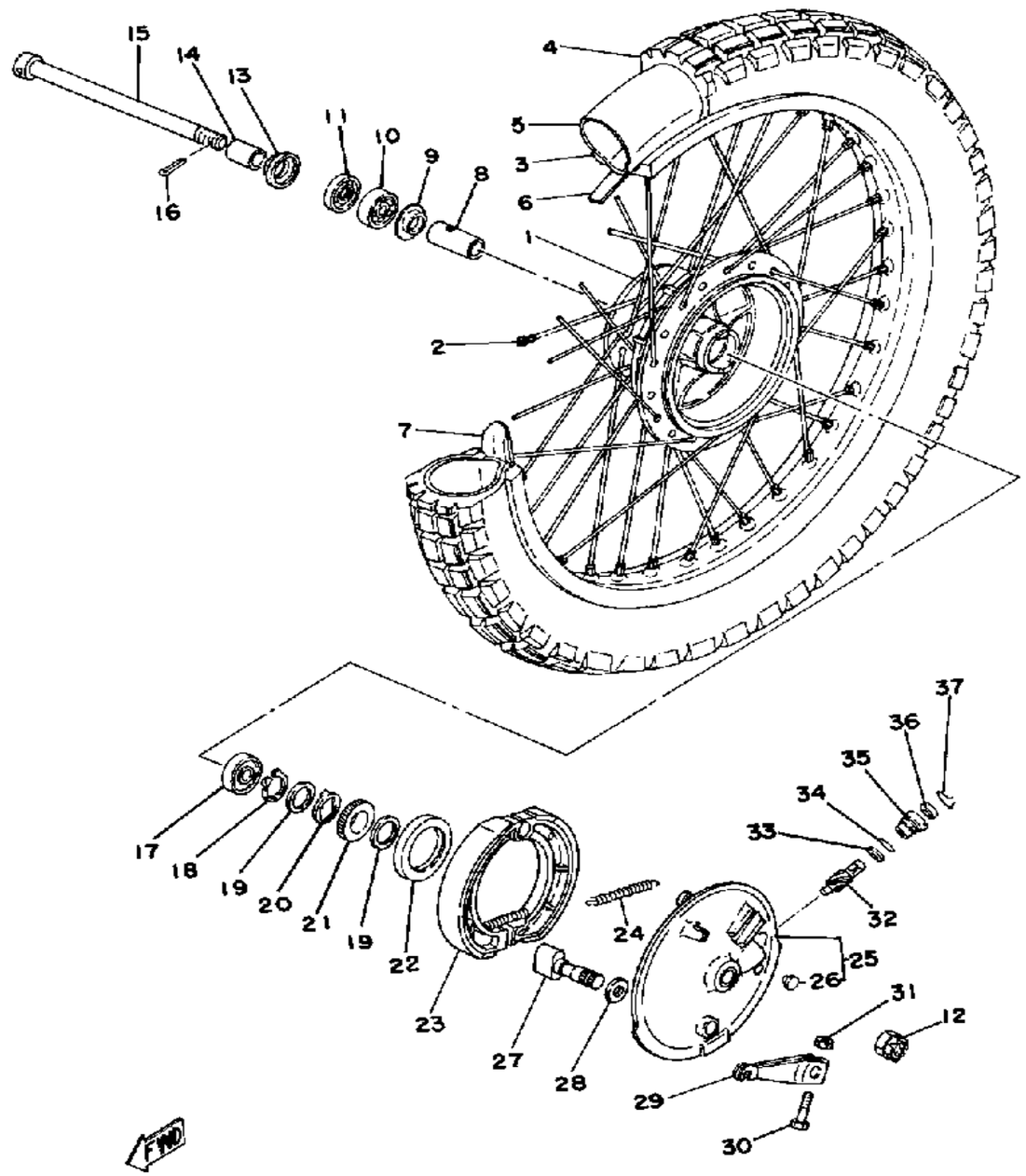

FRONT WHEEL

Ref. No.	Part Number	Description	Qty	Remarks
29	2N6-25155-00-00	LEVER, CAMSHAFT 1	1	
30	90101-06278-00	BOLT	1	
31	95380-06600-00	NUT, HEXAGON	1	
32	308-25138-00-00	GEAR, METER	1	
33	90201-07076-00	WASHER, PLATE	1	
34	93210-14104-00	O-RING	1	
35	109-25136-00-00	BUSH	1	
36	93104-07003-00	OIL SEAL	1	
37	102-25137-00-00	RING, STOP	1	

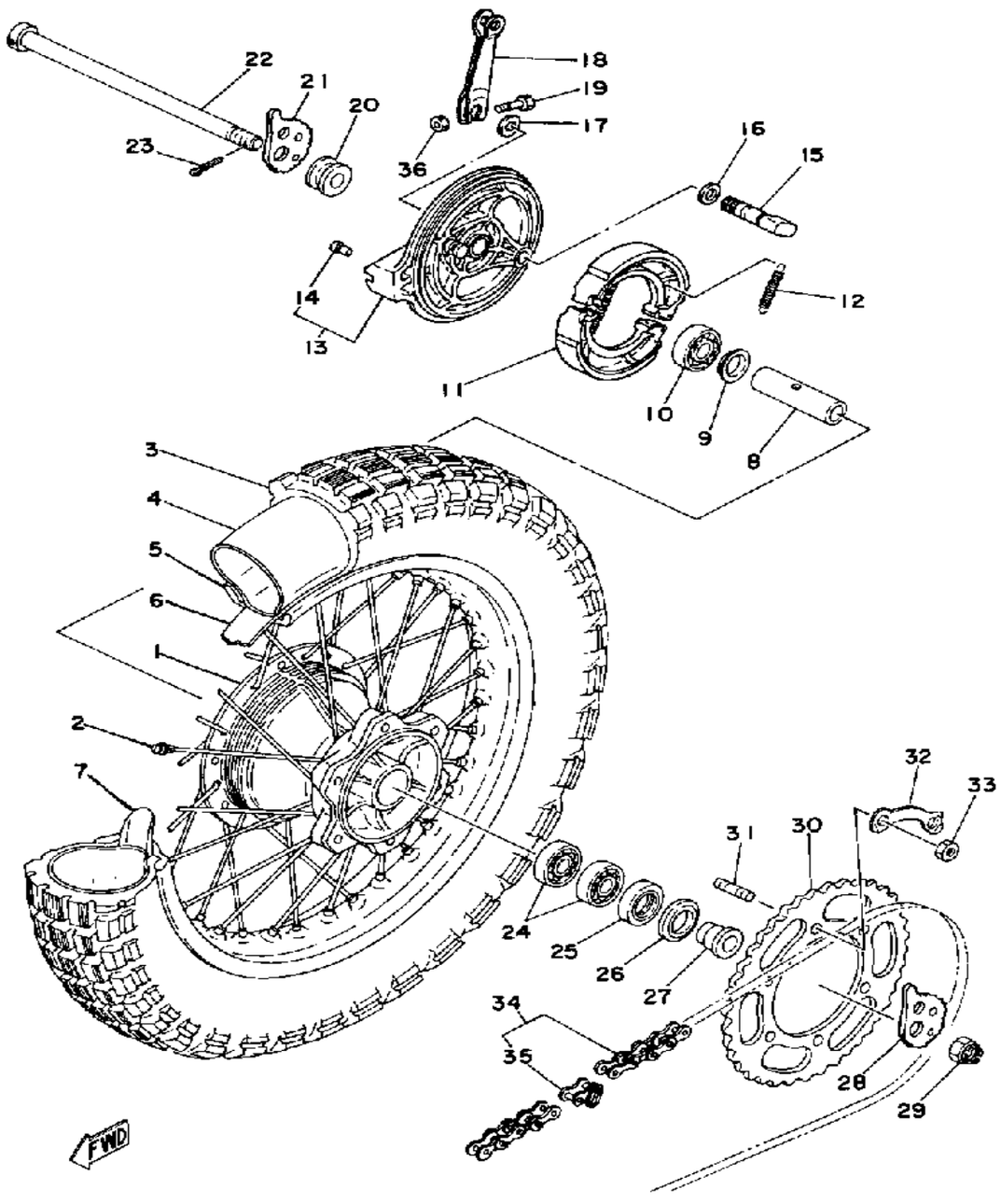

REAR WHEEL

Ref. No.	Part Number	Description	Qty	Remarks
1	(1M1-25311-00-98)	HUB, REAR	1	LOW GLOSS BLK
2	1M1-25304-00-00	SPOKE SET, REAR	1	
3	(94140-18317-00)	400X18 DUN TRI UNI	1	
4	94240-18098-00	TUBE (4.00-18)	1	
5	(94418-18192-00)	RIM 1.85X 8	1	
6	94340-18022-00	BAND, RIM (4.00-18)	1	
7	1T2-25394-00-00	SPACER, BEAD	2	
8	90560-17233-00	SPACER	1	
9	483-25315-00-00	FLANGE, SPACER	1	
10	93306-20310-00	BEARING (B6203DU)	1	
11	214-W2535-00-00	BRAKESHOE SET-2PCS	2	
12	90507-20002-00	SPRING, TENSION	2	
13	(1M1-25026-10-98)	BRAKE SHOE PLT ASSEMBLY	1	LOW GLOSS BLK
14	90480-10068-00	. GROMMET	1	
15	214-25351-01-00	CAMSHAFT	1	
16	148-25353-00-00	SHIM, CAMSHAFT	1	
17	148-25359-00-00	SEAL, CAMSHAFT	1	
18	1E2-25155-00-00	LEVER, CAMSHAFT 1	1	
19	90101-06278-00	BOLT	1	
20	90387-17141-00	COLLAR	1	
21	1M1-25389-01-00	PULLER, CHAIN 2	1	
22	150-25381-00-00	AXLE, WHEEL	1	
23	93306-20310-00	BEARING (B6203DU)	2	
24	93306-20310-00	BEARING (B6203DU)	2	
25	93106-25003-00	OIL SEAL, DD-TYPE (DD-25-40-9)	1	
26	431-25367-00-00	COVER, HUB DUST	1	
27	90387-17555-00	COLLAR	1	
28	1M1-25388-01-00	PULLER, CHAIN 1	1	

CONTINUED ON NEXT FRAME ➤

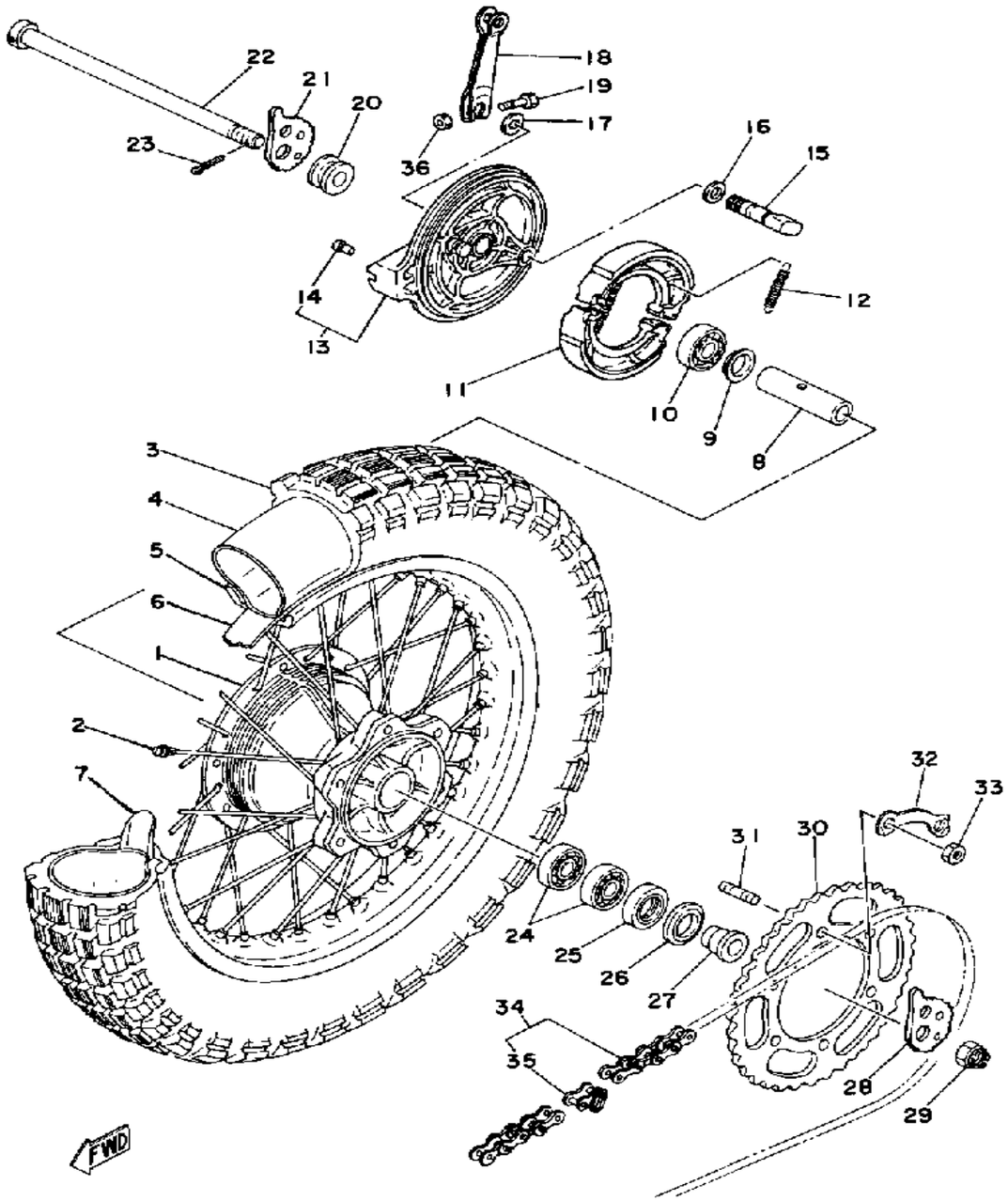

REAR WHEEL

Ref. No.	Part Number	Description	Qty	Remarks
29	90171-16007-00	NUT, CASTLE (275-25382-00) .	1	
30	1M1-25447-10-00	SPROCKET, DRVN 47T	1	YAMAHA BLACK
31	90116-10234-00	BOLT, STUD	6	
32	1M1-25412-00-00	WASHER	3	
33	95311-10700-00	NUT	6	
34	9Y585-20103-00	CHAIN 520DS-104L	1	
35	94685-20001-00	. JOINT CHAIN	1	
36	95380-06600-00	NUT, HEXAGON	1	

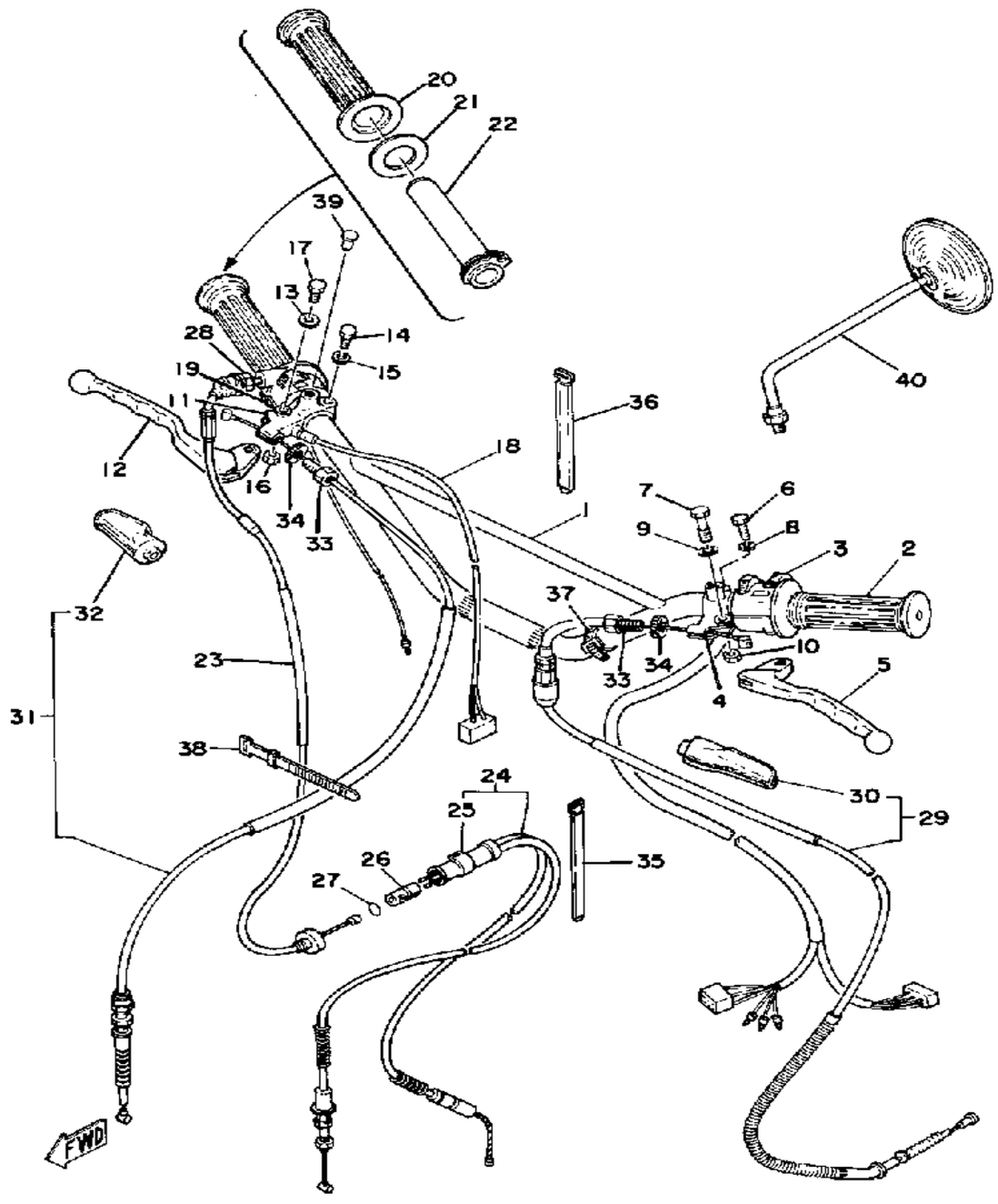

STEERING HANDLE - CABLE

Ref. No.	Part Number	Description	Qty	Remarks
1	2A8-26111-00-00	HANDLEBAR	1	
2	1E6-26241-00-00	GRIP LH (L.H.)	1	
3	1M1-83973-50-00	SWITCH, HANDLE 3	1	
4	3Y6-82911-00-00	HOLDER, LEVER 1	1	LOW GLOSS BLK
5	2H0-83912-30-00	LEVER L	1	LOW GLOSS BLK
6	97003-06022-00	BOLT, HEXAGON	1	
7	90109-06797-00	BOLT	1	
8	92995-06100-00	WASHER, SPRING	1	
9	90201-08083-00	WASHER, PLATE	1	
10	95601-06100-00	NUT, U	1	
11	361-82920-93-00	HOLDER, LEVER 2 (36182-92131-00)	1	
12	2H0-83922-30-00	LEVER R	1	LOW GLOSS BLK
13	90201-08083-00	WASHER, PLATE	1	
14	97003-06022-00	BOLT, HEXAGON	1	
15	92995-06100-00	WASHER, SPRING	1	
16	95601-06100-00	NUT, U	1	
17	90109-06797-00	BOLT	1	
18	1M1-83980-30-00	STOP SWITCH ASSEMBLY	1	
19	1R6-83976-01-00	SWITCH, HANDLE 1	1	
20	1A0-26242-01-00	GRIP RH (R.H.)	1	
21	1M1-26249-01-00	RING, LEAF	1	
22	434-26243-00-00	TUBE, THROTTLE GUIDE	1	
23	2A6-26311-00-00	CABLE, THROTTLE 1	1	
24	2N6-26312-00-00	CABLE, THROTTLE 2	1	
25	1M1-26339-00-00	. BOOT	1	
26	1M1-26263-00-00	PIECE, CONNECTING	1	
27	93210-10118-00	O-RING	1	
28	90170-10038-00	NUT, HEXAGON	1	

CONTINUED ON NEXT FRAME ➤

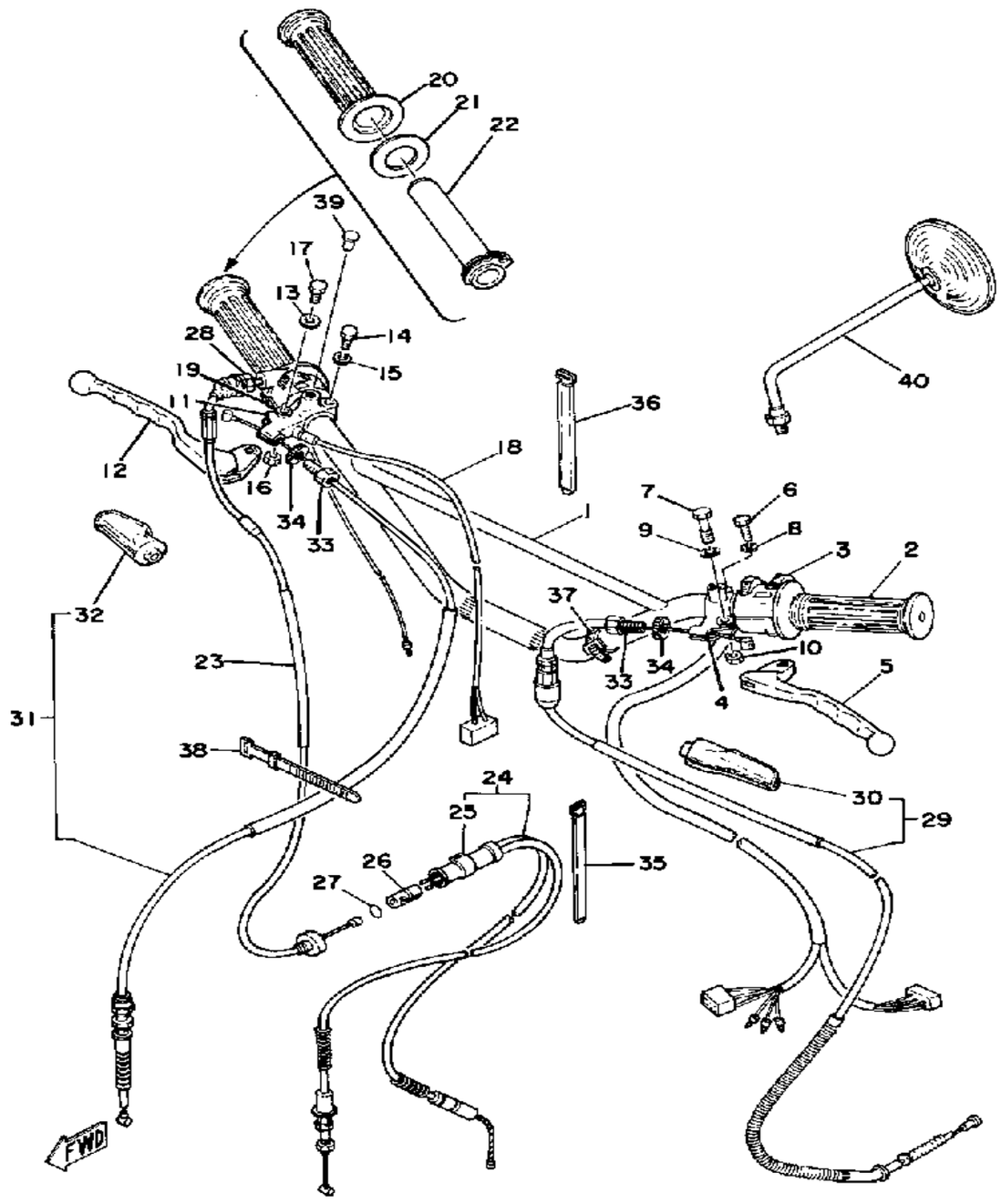

STEERING HANDLE - CABLE

Ref. No.	Part Number	Description	Qty	Remarks
29	1M1-26335-00-00	CABLE, CLUTCH	1	
30	382-26372-01-00	. COVER, HANDLE LEVER . . .	1	
31	2N6-26341-00-00	CABLE, BRAKE	1	
32	498-26372-00-00	. COVER, HANDLE LEVER 1 . .	1	
33	90123-08046-00	BOLT	2	
34	90179-08148-00	NUT	2	
35	(12R-26397-00-00)	BAND	1	
36	341-26397-01-00	BAND	1	
37	437-83936-01-00	BAND, SWITCH CORD	5	
38	437-83936-11-00	BAND, SWITCH CORD	1	
39	90338-09012-00	PLUG	1	
40	1Y1-26290-10-00	MIRROR ASSEMBLY LH	1	
41	1Y1-26290-00-00	MIRROR ASSEMBLY RH	1	OPTIONAL EQUIPMENT

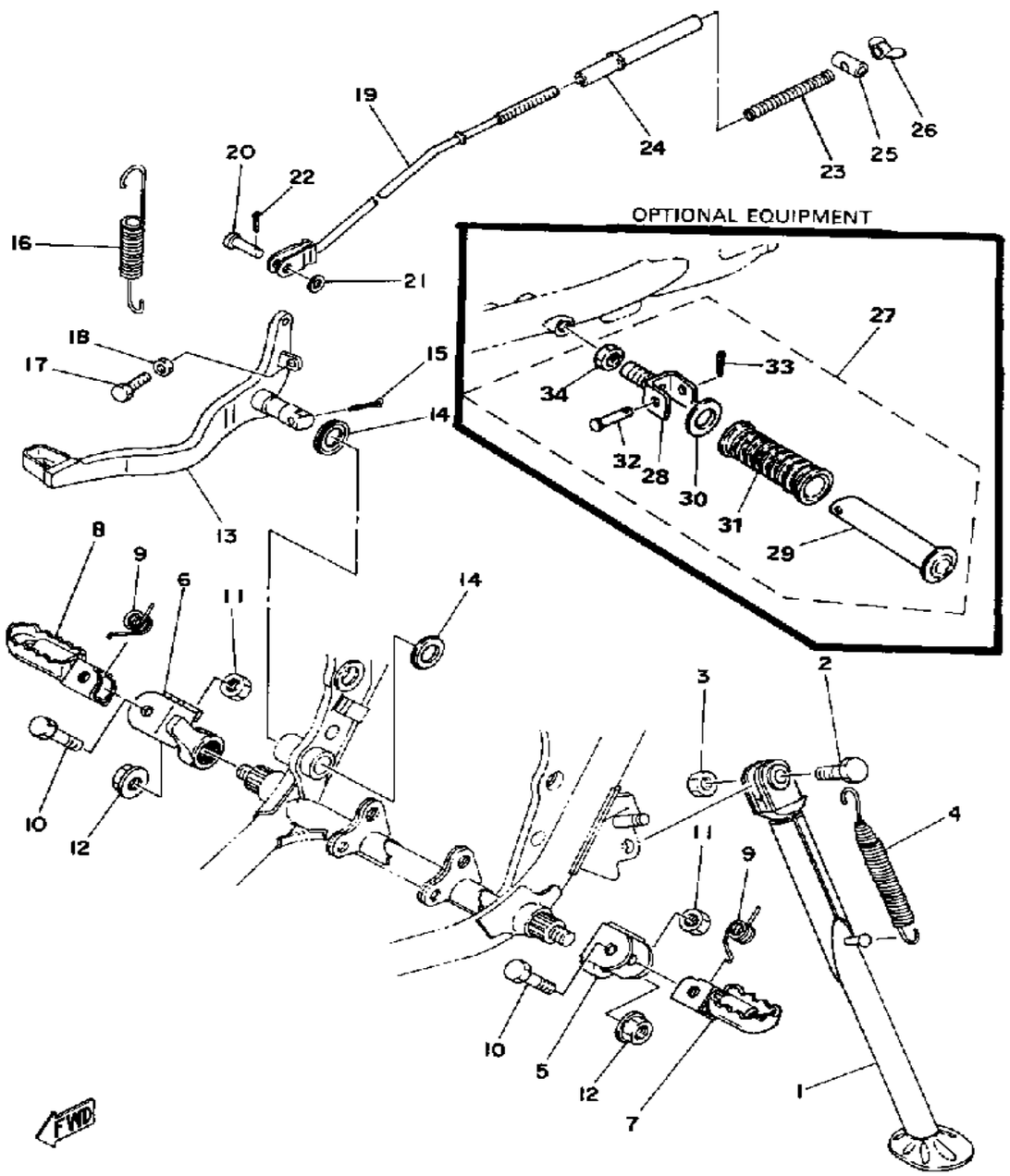

STAND - FOOTREST - BRAKE PEDAL

Ref. No.	Part Number	Description	Qty	Remarks
1	2Y0-27311-00-33	STAND, SIDE	1	YAMAHA BLACK
2	90109-103A1-00	BOLT	1	
3	90185-10037-00	NUT, SELF-LOCKING	1	
4	90507-29021-00	SPRING, TENSION	1	
5	1M1-27412-00-00	BRACKET, FOOTREST 1	1	
6	(1M1-27422-00-00)	BRACKET, FOOTREST 2	1	
7	22W-27411-01-90	FOOTREST 1	1	YAMAHA BLACK
8	22W-27421-01-90	FOOTREST 2 (3R1-27421-00)	1	YAMAHA BLACK
9	90508-20023-00	SPRING, TORSION	2	
10	90101-08371-00	BOLT	2	
11	95611-08100-00	NUT, U	2	
12	90185-12072-00	NUT, SELF-LOCKING	2	
13	1M1-27211-01-33	PEDAL, BRAKE	1	YAMAHA BLACK
14	498-27235-00-00	COVER, DUST	2	
15	91401-30030-00	PIN, COTTER	1	
16	90506-18289-00	SPRING, TENSION	1	
17	97011-06025-00	BOLT (97001-06025)	1	
18	95380-06700-00	NUT	1	
19	483-27231-00-00	ROD, BRAKE	1	
20	90240-06103-00	PIN, CLEVIS	1	
21	92990-06200-00	WASHER, PLAIN	1	
22	91490-20020-00	PIN, COTTER (91401-20020-00)	1	
23	90501-10245-00	SPRING, COMPRESSION	1	
24	1M1-27244-00-00	COVER	1	
25	90249-12008-00	PIN	1	
26	90179-06411-00	NUT, SPECIAL SHAPE	1	
27	120-27430-02-00	RR FOOTREST ASSEMBLY 1	2	OPTIONAL EQUIPMENT
28	120-27432-02-00	BRACKET 1	2	OPTIONAL EQUIPMENT

CONTINUED ON NEXT FRAME ➤

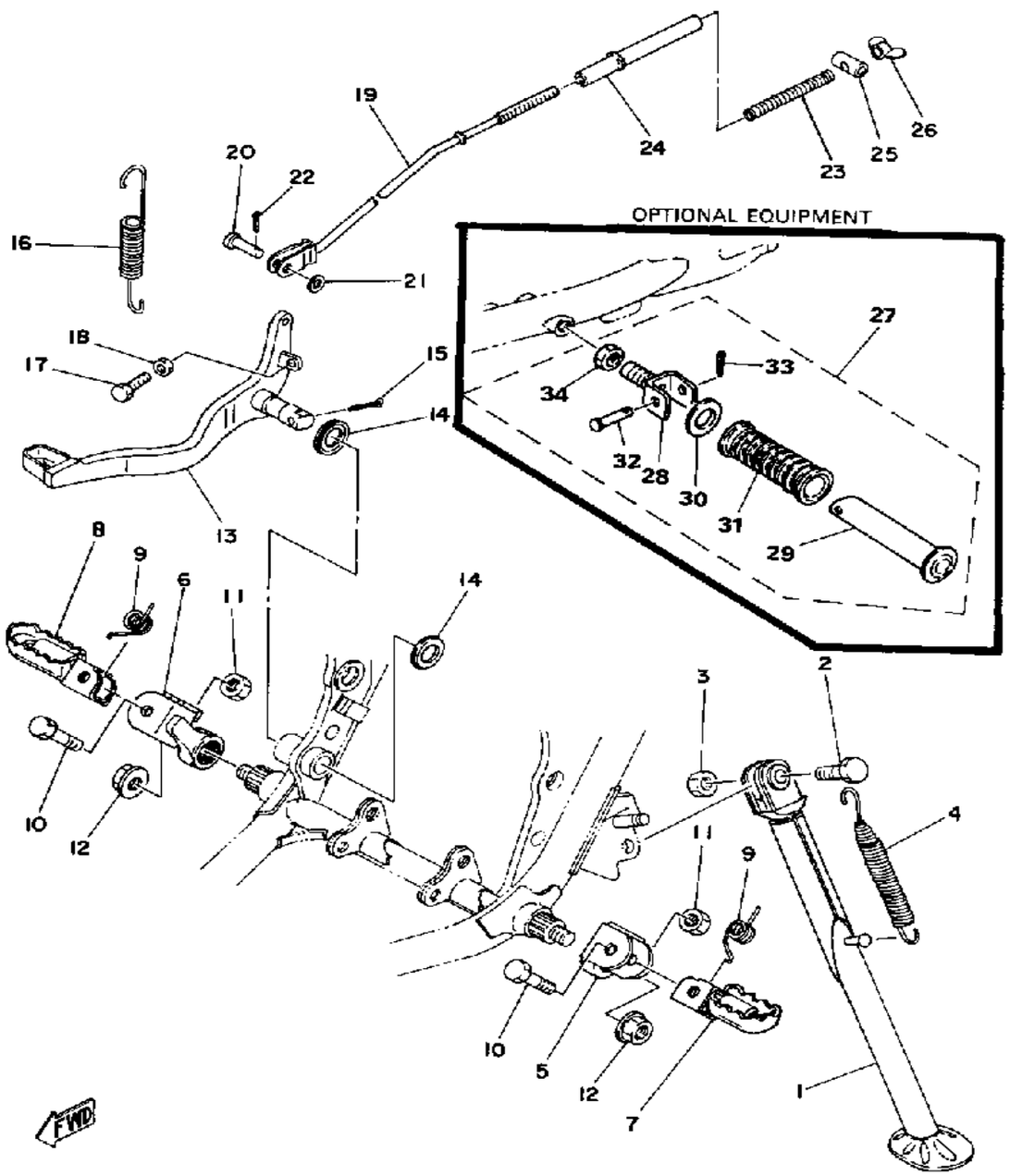

STAND - FOOTREST - BRAKE PEDAL

Ref. No.	Part Number	Description	Qty	Remarks
29	120-27431-00-00	. FOOTREST, REAR 1	2	OPTIONAL EQUIPMENT
30	90201-20279-00	. WASHER, PLATE	2	OPTIONAL EQUIPMENT
31	120-27433-00-00	. COVER, REAR FOOTREST . .	2	OPTIONAL EQUIPMENT
32	90240-06009-00	. PIN, CLEVIS	2	OPTIONAL EQUIPMENT
33	91490-16020-00	. PIN, COTTER (91402-16015) .	2	OPTIONAL EQUIPMENT
34	95301-12700-00	. NUT (95302-12700)	2	OPTIONAL EQUIPMENT

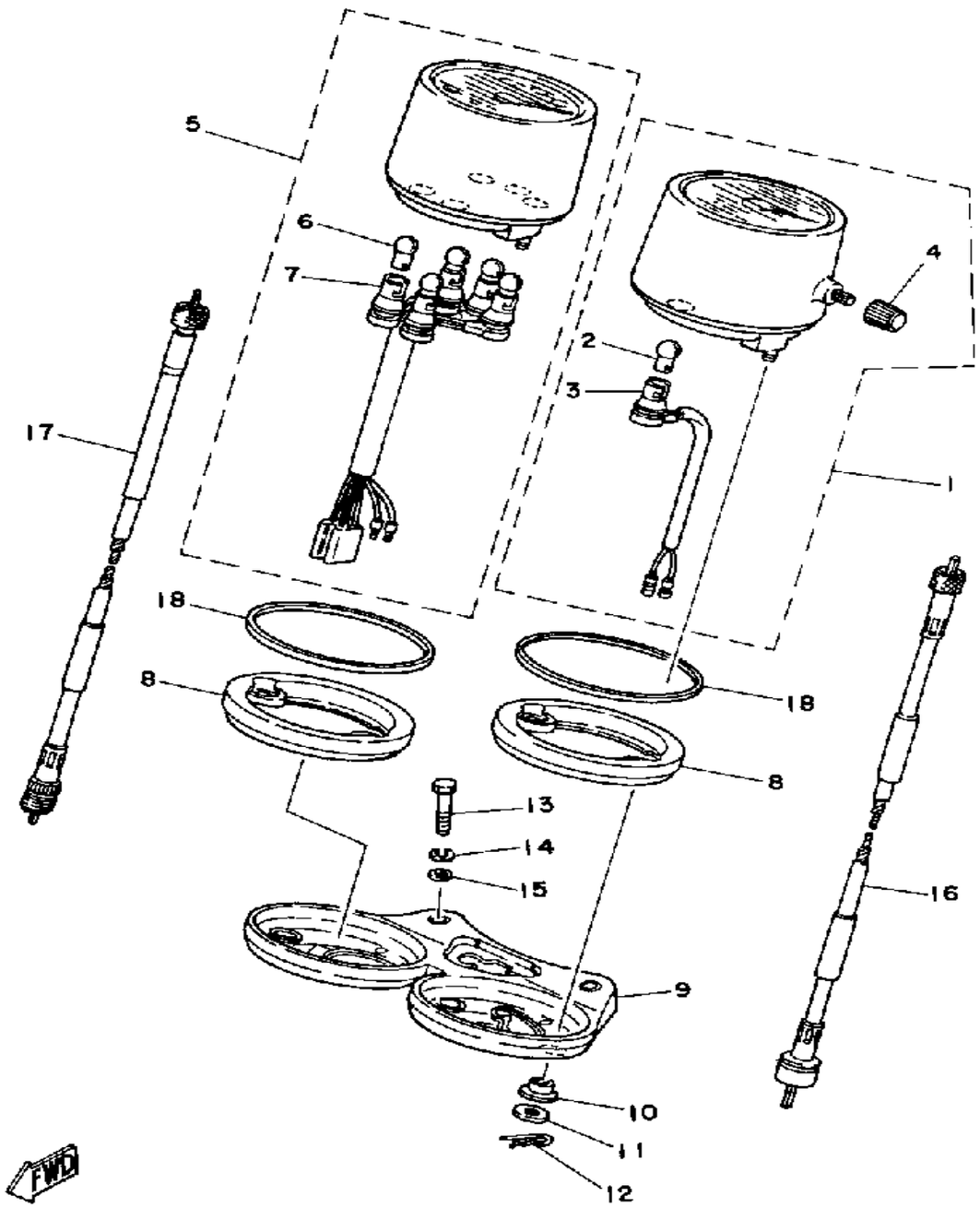

METER

Ref. No.	Part Number	Description	Qty	Remarks
1	2N4-83570-A0-00	SPEEDOMETER ASSEMBLY	1	
2	122-83516-10-00	. BULB	1	
3	(1V1-83536-00-00)	SOCKET, METER	1	
4	1E6-83578-10-00	. KNOB, TRIP METER	1	
5	(3A6-83540-F0-00)	TACHOMETER ASSEMBLY	1	
6	122-83516-10-00	. BULB	5	
7	(2A6-83520-00-00)	SOCKET CORD ASSEMBLY	1	
8	2A6-83513-00-00	DAMPER	2	
9	2A6-83519-00-00	BRACKET, METER	1	
10	1M1-83526-00-00	DAMPER 2	4	
11	90201-05033-00	WASHER, PLATE	4	
12	90468-10050-00	CLIP	4	
13	97021-06030-00	BOLT	2	
14	92995-06100-00	WASHER, SPRING	2	
15	90201-061A5-00	WASHER, PLATE	2	
16	2N6-83550-00-00	SPEEDOMETER CABLE	1	
17	2N6-83560-00-00	TACHOMETER CABLE	1	
18	2A6-83506-00-00	RING, METER COVER	2	

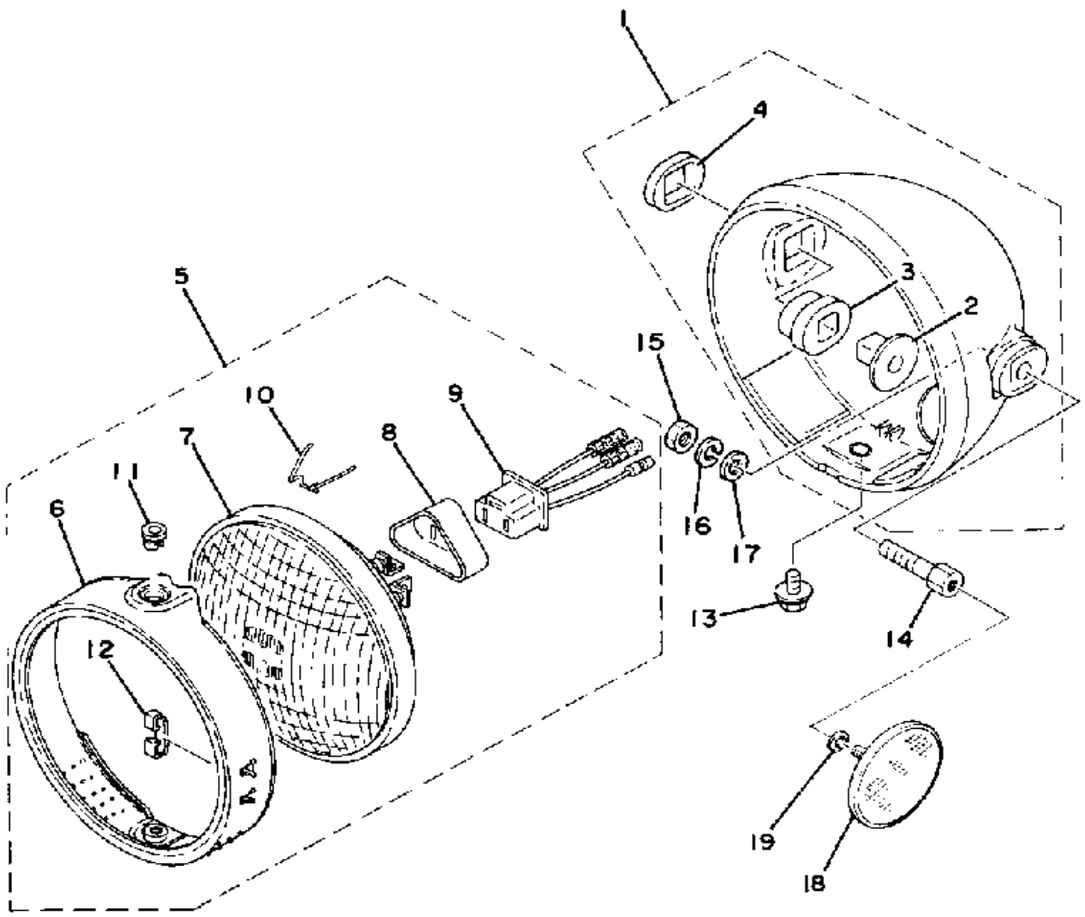

HEADLIGHT

Ref. No.	Part Number	Description	Qty	Remarks
1	1M1-84130-60-00	BODY ASSEMBLY, HEADLIGHT (1M1-84130-60-98)	1	LOW GLOSS BLK
2	498-84145-60-00	. COLLAR, BODY FITTING	2	
3	498-84163-60-00	. DAMPER	2	
4	1M1-84164-60-00	. DAMPER	2	
6	1M1-84195-61-00	. RING, RETAINING	1	
7	2A6-84120-60-00	. LENS ASSEMBLY	1	
8	341-84397-61-00	. COVER, SOCKET	1	
9	371-84312-60-00	. SOCKET	1	
10	1M1-84124-60-00	. SPRING, SET	3	
11	1M1-84133-60-00	. COLLAR, SCREW	1	
12	498-84128-60-00	. SPACER	1	
13	1M1-84137-60-00	BOLT, SPECIAL	1	
14	90109-08448-00	BOLT	2	
15	95333-08600-00	NUT	2	
16	92990-08100-00	WASHER, SPRING	2	
17	92990-08200-00	WASHER, PLAIN	2	
18	1M1-85111-10-00	REFLECTOR, FRONT 1	1	U.R.
	2N8-85111-00-00	REFLECTOR, FRONT 1	2	U.R.
19	90430-06012-00	GASKET	2	U.R.

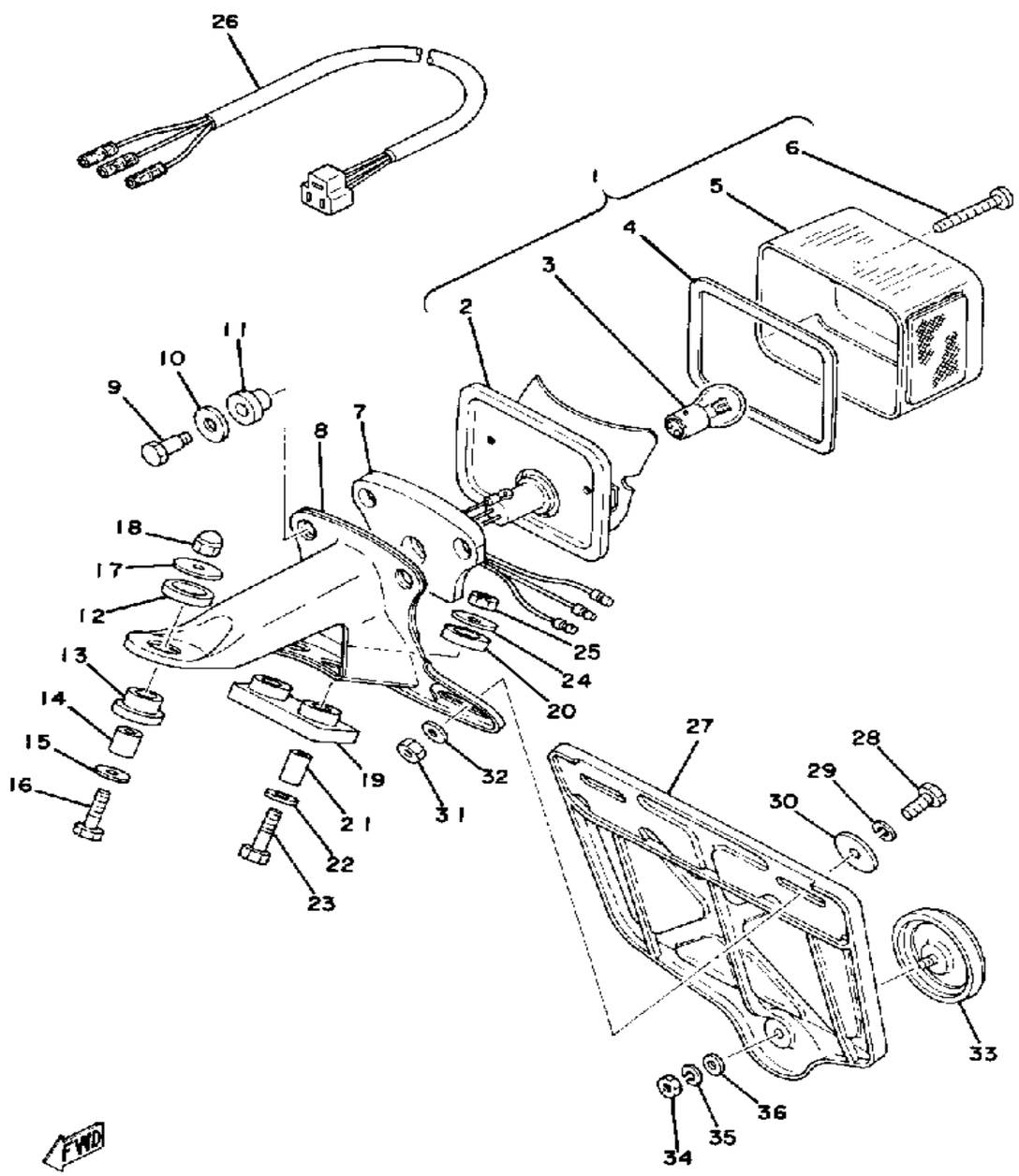

TAILLIGHT

Ref. No.	Part Number	Description	Qty	Remarks
1	1M1-84510-60-00	TAILLIGHT UNIT ASSEMBLY . .	1	
2	1M1-84511-60-00	. BASE, TAILLIGHT	1	
3	1M1-84514-60-00	. BULB	1	
4	1M1-84523-60-00	. GASKET, LENS	1	
5	1M1-84521-60-00	. LENS, TAILLIGHT	1	
6	1M1-84524-60-00	. SCREW, LENS FITTING	2	
7	1M1-84512-60-00	SEAT, BASE	1	
8	1M1-84551-60-33	BRACKET, LICENCE	1	YAMAHA BLACK
9	1M1-84526-60-00	SCREW	2	
10	2H7-84754-00-00	WASHER, SPECIAL	2	
11	1M1-84527-60-00	DAMPER	2	
12	1M1-84553-10-00	DAMPER	1	
13	1M1-84553-20-00	DAMPER	1	
14	90387-06553-00	COLLAR	1	
15	90201-061A5-00	WASHER, PLATE	1	
16	97011-06025-00	BOLT (97001-06025)	1	
17	90201-06074-00	WASHER, PLATE	1	
18	95303-06800-00	NUT (CROWN)	1	
19	1M1-84553-00-00	DAMPER	1	
20	1M1-84553-10-00	DAMPER	2	
21	90387-06554-00	COLLAR	2	
22	90201-061A5-00	WASHER, PLATE	2	
23	97013-06035-00	BOLT	2	
24	90201-06074-00	WASHER, PLATE	2	
25	95380-06600-00	NUT, HEXAGON	2	
26	1M1-84517-00-00	CORD, TAILLIGHT	1	
27	1M1-85132-62-00	BRACKET, REFLECT 1	1	
28	97313-06016-00	BOLT	2	
29	92995-06100-00	WASHER, SPRING	2	

CONTINUED ON NEXT FRAME ➤

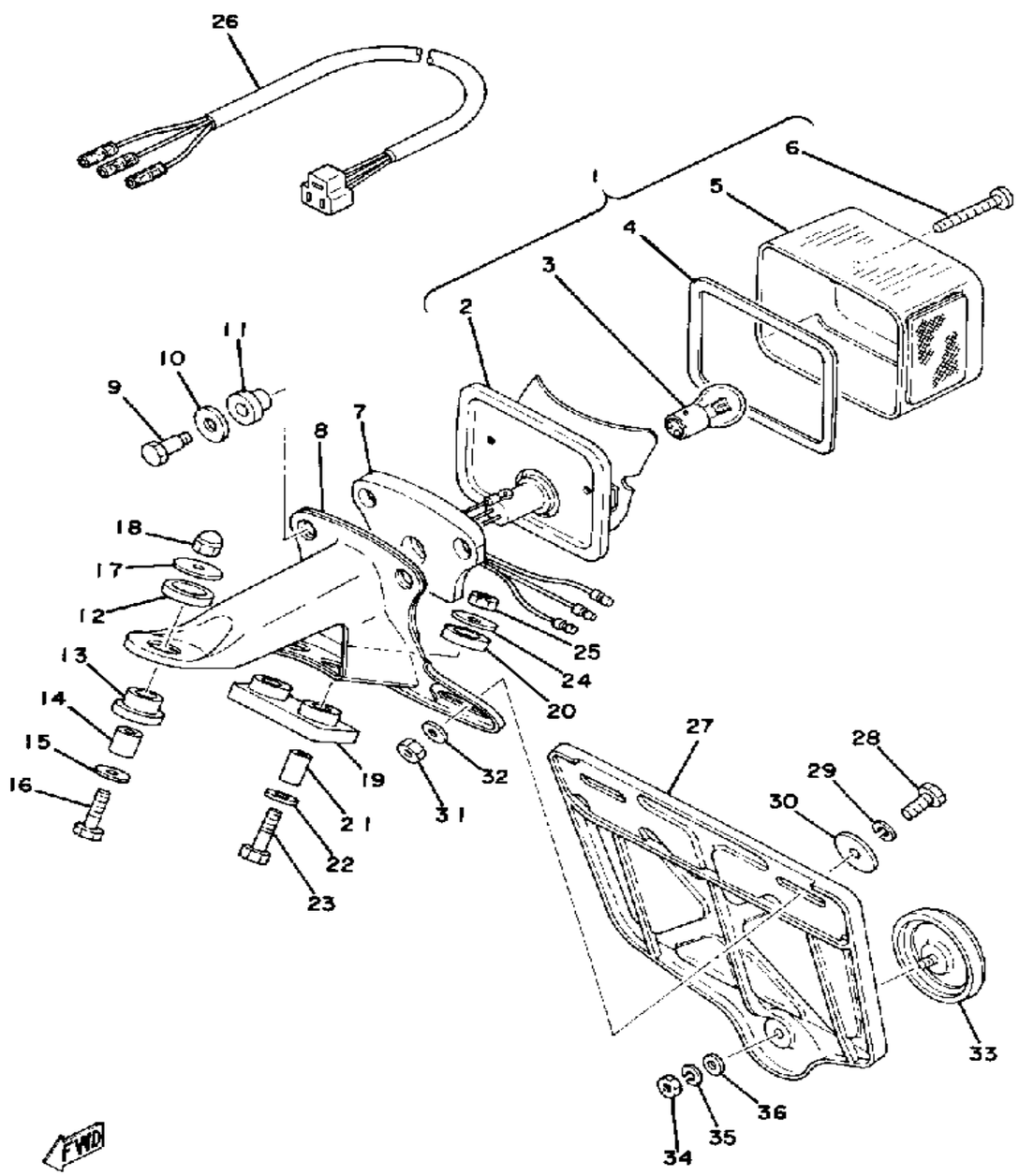

TAILLIGHT

Ref. No.	Part Number	Description	Qty	Remarks
30	90201-06074-00	WASHER, PLATE	2	
31	95380-06600-00	NUT, HEXAGON	2	
32	90201-061A5-00	WASHER, PLATE	2	
33	1M1-85131-10-00	REFLECTOR, REAR 1	1	U.R.
	449-85131-02-00	REFLECTOR, REAR 1	1	U.R.
34	95380-05600-00	NUT	1	
35	92990-05100-00	WASHER, SPRING	1	
36	92990-05200-00	WASHER, PLAIN	1	

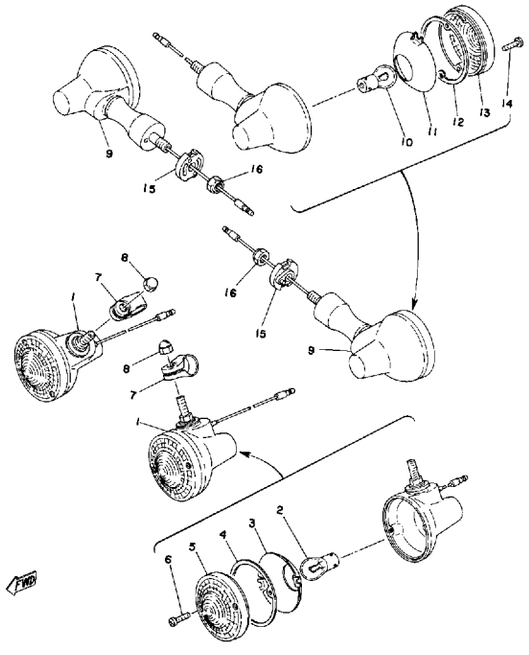

FLASHER LIGHT

Ref. No.	Part Number	Description	Qty	Remarks
1	1M1-83310-60-00	FRT FLSHR LITE ASSEMBLYASS''Y 1	2	
2	115-83311-60-00	. BULB, FLASHER	2	
3	1M1-83309-60-00	. REFLECTOR	2	
4	1M1-83313-60-00	. GASKET, FLSHR LENS	2	
5	341-83312-70-00	. LENS, FLASHER	2	
6	97780-30120-00	. SCREW, PANHEAD TAP	4	
7	1M1-83318-00-00	STAY, FLASHER 1	2	
8	95303-08800-00	NUT (CROWN)	2	
9	1M1-83330-60-00	R FLSHR LITE ASSEMBLY . . .	2	
10	115-83311-60-00	. BULB, FLASHER	2	
11	1M1-83309-60-00	. REFLECTOR	2	
12	1M1-83313-60-00	. GASKET, FLSHR LENS	2	
13	341-83312-70-00	. LENS, FLASHER	2	
14	97780-30120-00	. SCREW, PANHEAD TAP	4	
15	(1M1-83316-00-00)	COLLAR, FLASHER 1	2	
16	95601-10100-00	NUT, U (95602-10100-00)	2	

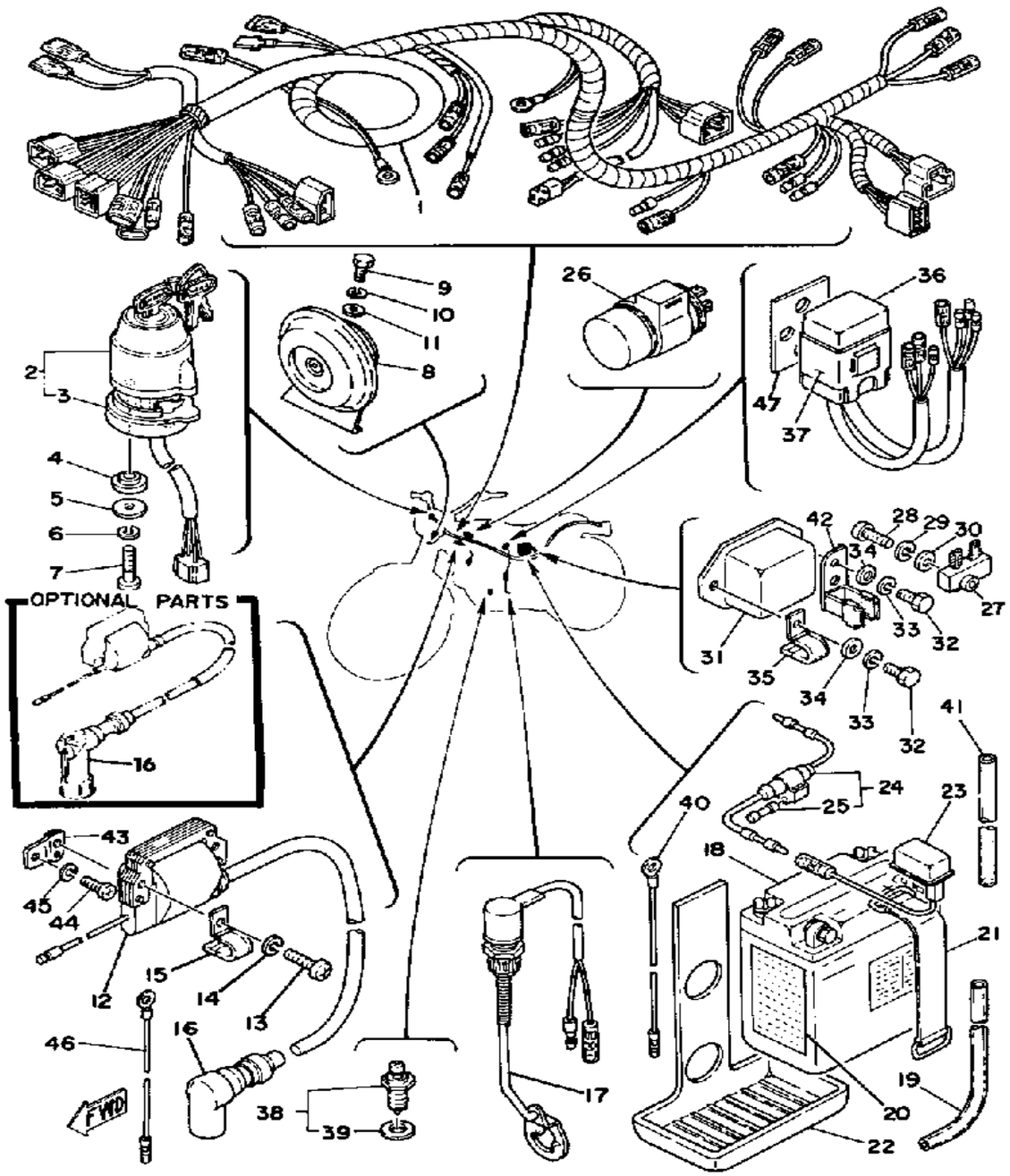

ELECTRICAL

Ref. No.	Part Number	Description	Qty	Remarks
1	(2N6-82590-50-00)	WIRE HARNESS ASSEMBLY . .	2	
2	443-82508-21-00	MAIN SWITCH ASSEMBLY . . .	1	
3	1M1-82555-00-00	. DAMPER, MAIN SWCH 1	1	
4	1M1-82556-00-00	DAMPER, STOPPER	2	
5	90201-05033-00	WASHER, PLATE	2	
6	92990-05100-00	WASHER, SPRING	2	
7	98503-05025-00	SCREW, PAN HEAD	2	
8	3Y1-83371-10-00	HORN	1	
9	97013-06012-00	BOLT	2	
10	92995-06100-00	WASHER, SPRING	2	
11	90201-061A5-00	WASHER, PLATE	2	
12	5G4-82310-40-00	IGNITION COIL ASSEMBLY . . .	1	
13	98511-06025-00	SCREW PAN HEAD	2	
14	92995-06100-00	WASHER, SPRING	2	
15	90462-05005-00	CLAMP	1	
16	81E-82370-20-00	PLUG CAP ASSEMBLY	1	
	8E7-82370-11-00	PLUG CAP ASSEMBLY	1	OPTIONAL PART
17	1M1-82530-02-00	STOP SWITCH ASSEMBLY . . .	1	
18	BTY-6N63B-10-00	YUASA 6N6-3B-1 (1E6-82110-29)	1	
19	90445-08047-00	HOSE (168-82112-00)	1	
20	118-82141-09-00	LABEL, BATTERY	1	
21	120-82131-00-00	BAND, BATTERY	1	
22	1E6-82122-01-00	SEAT, BATTERY	1	
23	1M1-82115-00-00	WIRE, PLUS LEAD	1	
24	1E6-82150-00-00	FUSE HOLDER ASSEMBLY . . .	1	
25	1E6-82151-00-00	. FUSE (10A)	2	
26	3BK-83350-00-00	FLASHER RELAY ASSEMBLY .	1	
27	1M1-81970-60-00	RECTIFIER ASSEMBLY	1	

CONTINUED ON NEXT FRAME ➤

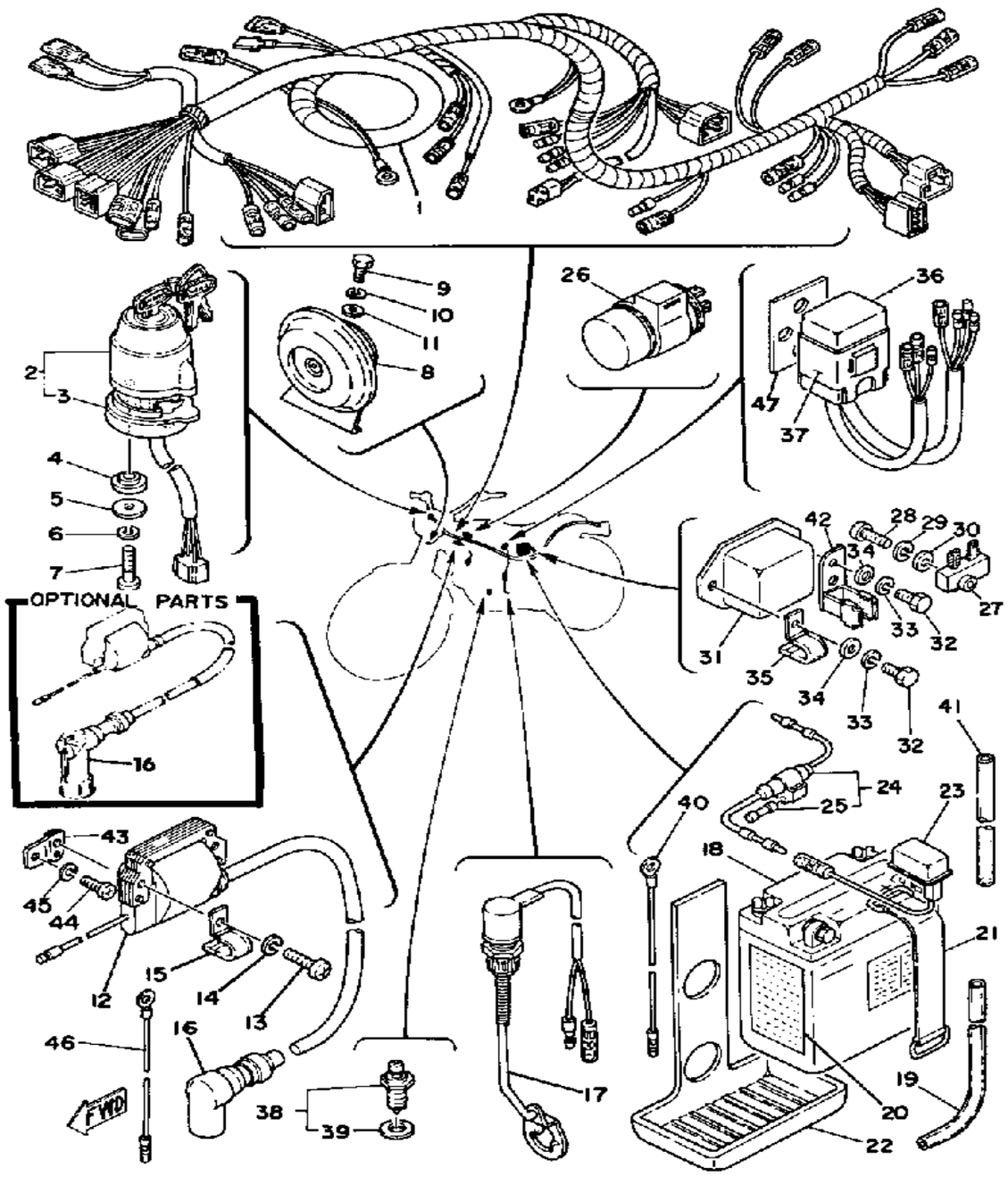

ELECTRICAL

Ref. No.	Part Number	Description	Qty	Remarks
28	98580-05020-00	SCREW, PAN HEAD	1	
29	92990-05100-00	WASHER, SPRING	1	
30	92901-05600-00	WASHER, PLATE	1	
31	443-81910-62-00	VOLTAGE REG ASSEMBLY (498-81910-23)	1	
32	97013-06012-00	BOLT	1	
33	92995-06100-00	WASHER, SPRING	1	
34	90201-061A5-00	WASHER, PLATE	1	
35	90462-05005-00	CLAMP	1	
36	2N6-85540-21-00	CDI UNIT ASSEMBLY	1	
37	2A7-85546-00-00	BAND	1	
38	2H7-82540-00-00	NEUTRAL SWITCH ASSY	1	
39	341-82543-00-00	. GASKET	1	
40	1H2-83346-00-00	CORD (1M1-82519-00)	1	
41	(90446-09119-00)	HOSE	1	
42	(1M1-82522-00-00)	CLAMP, COUPLER	1	
43	(2N6-82316-00-00)	BRACKET, IGN COIL	1	
44	98503-06014-00	SCREW, PAN HEAD (92501-06015)	1	
45	92995-06100-00	WASHER, SPRING	1	
46	3FU-83364-00-00	WIRE, EARTH LEAD 1	1	
47	1M2-85547-00-00	DAMPER	1	

MOTORCYCLE
M79-005

DT250F
1979 SERVICE DATA

MODEL – IBM I.D. NUMBER	DT250F 2N6
Initial Engine Number/Frame Number	2N6-000101 / 2N6-000101
Basic Color(s)	Competition Yellow
Fuel Type/Fuel Tank Capacity/Reserve Capacity	Regular / 8.5 Lit. (2.2 Gal.)
Dry Vehicle Weight	123 kg (260 lb.)
ENGINE TYPE	2-Stroke, Air-Cooled, Reed Valve
Bore/Stroke/Number Cylingers/Displacement (cc)	70mm / 64mm / 1 / 246
Compression Ratio/Compression Pressure min~max	10.2:1 (corrected 6.7:1) / 12.0 ~ 13.0 kg/cm^2
Piston Skirt Clearance new/max.	0.040 ~ 0.045mm / 0.1mm
Ring End Gap Top/2nd/3rd	0.2 ~ 0.4mm / 0.2 ~ 0.4mm / ϕ
Valve Clearance (cold) Intake/Exhaust	ϕ
Oil Pressure Hot/rpm	ϕ
Oiling System	Autolube
Capacity: Dry	1.1 Lit.
Oil and Filter Change	ϕ
Oil Change	ϕ
Lubricant: Temp above 5°C (40°F)	Yamalube 2*
Below 15°C (60°F)	Yamalube 2*
AUTOLUBE – Min. Stroke/Color Code	0.25 ~ 0.30mm / Red
Minimum Output @ 200 cycles	0.62cc
Maximum Output @ 200 cycles	5.16cc
CARBURETOR – Mfr./Type/I.D. Number	Mikuni / VM28SS / 2N600
Main Jet/Pilot Jet	150 / 50
Needle Jet/Jet Needle-Clip Position	0-4 / 5F36-3
Slide Cutaway or Throttle Valve	3.0
Float Level	23 ± 1mm
Idle rpm	1000 ~ 1200 rpm
CO % @ Idle (Diagnostic Use Only)	4% or Less
SUSPENSION	
Front Forks: Oil Type/Level/Qty.	10 wt. Fork Oil* / ϕ / 257cc
Gas Pressure	ϕ
Spring Length Std.	524mm
Monoshock: Oil Type/Qty.	Not Rebuildable
Gas Pressure	15 kg/cm^2
Minimum Brake Lining Thickness	Front: 2mm Rear: 2mm
Tire Size (Nominal Pressure)	F:3.00-21(1.3kg/cm^2/18 psi) R:4.00-18(1.5kg/cm^2/21 psi)
TRANSMISSION – Oil Type/Qty Chg/Qty Reassemble	SAE 10W30 SE / 1100cc / 1200cc
Primary Drive Type/Teeth/Ratio	Helical Gear / 65-23 / 2.826
Secondary Drive Type/Teeth/Chain	Chain / 47-14 / DID520DS-104L
Clutch Friction Plate Thickness Std ~ Min.	3.0 ~ 2.7mm
Clutch Spring Length Std ~ Min.	34.9 ~ 33.9mm
Middle Gear Case Capacity	ϕ
Final Gear Case Capacity	ϕ
Gear Case Lubricant: Temp above 5°C (40°F)	ϕ
Temp below 15°C (60°F)	ϕ
All Weather Conditions	ϕ

Service Copy:_____Service Mgr._____Mechanic_____Mechanic_____Mechanic_____Binder

Office Copy:_____General Mgr._____Sales_____Parts_____Binder

©YAMAHA MOTOR CORPORATION, U. S. A., BUENA PARK, CALIFORNIA January 24, 1979 PAGE 1 OF 2

CHARGING SYSTEM	Flywheel Magneto / Single Phase / Half Wave
Battery: Model / Spec. Grav. / Chg. Rate	GS 6N6-3B-1 (6V6AH) / 1.26 / 0.6A
Maximum Output	7.6V 2.5A @ 8000 rpm
TROUBLESHOOTING	
Field Coil Color Code / Ω	ϕ
Charge Coil Color Code / Ω	Grn-Wht ~ Gnd / 0.36 Ω ± 10%
IGNITION SYSTEM	Capacitor Discharge Ignition
Ignition Timing	17° BTDC @ 4000 rpm
	(1.75mm BTDC)
Spark Plug Type	NGK B-8ES
Spark Plug Gap / Torque / Cap Ω	0.7 ~ 0.9mm / 2.5 m-kg / 5K Ω ± 10%
Point Gap / Condenser Capacitance	ϕ / ϕ
TROUBLESHOOTING	
Ignition Coil Test Gap / Primary Ω / Secondary Ω	6mm / 1.0 Ω ± 10% / 5.9K Ω ± 20%
Pulse Coil or Pick-up Coil Color Code / Ω	Wht-Red ~ Blk / 7.8 Ω ± 10% / Wht-Grn ~ Blk / 5.1 Ω ± 10%
Source Coil Color Code / Ω	Lo:Red ~ Blk / 82 Ω ± 10% / Hi:Brn ~ Blk / 305 Ω ± 10%
LIGHTING SYSTEM	
Headlight / Taillight / Signal Rating	6V35-35W / 6V25-5.3W / 6V17W
TROUBLESHO('ING	
Lighting Coil Co · Code / Ω	Yel ~ Gnd: 0.23 Ω ± 10%
TORQUE VALUE:	
Front Axle Nut	14 x 1.5: 7.8 m-kg
Front Axle Hol(Nut	ϕ
Rear Axle Nut	16 x 1.5: 8.8 m-kg
Rear Axle Pinch olt	
Clutch Nut	20 x 1.0: 7.5 m-kg (Use Lock Washer)
Drain Plug	12 x 1.5: 2.5 m-kg
Cylinder Head C er	ϕ
Cylinder Head:	Nut 8 x 1.25: 2.5 m-kg
	Stud 8 x 1.25: 2.5 m-kg
Engine Mountin olts: Front, Upper	8 x 1.25: 2.5 m-kg
Front, Lower	8 x 1.25: 2.5 m-kg
Rear, Upper	8 x 1.25: 2.5 m-kg
Rear, Lower	10 x 1.25: 4.0 m-kg

ϕ Does Not App to This Model

* Available From Yamaha Parts Distributors, Inc.

CHARGING SYSTEM	Flywheel Magneto / Single Phase / Half Wave
Battery: Model / Spec. Grav. / Chg. Rate	GS 6N6-3B-1 (6V6AH) / 1.26 / 0.6A
Maximum Output	7.6V 2.5A @ 8000 rpm
TROUBLESHOOTING	
Field Coil Color Code / Ω	ϕ
Charge Coil Color Code / Ω	Grn-Wht ~ Gnd / 0.36 Ω ± 10%
IGNITION SYSTEM	Capacitor Discharge Ignition
Ignition Timing	17° BTDC @ 4000 rpm
	(1.75mm BTDC)
Spark Plug Type	NGK B-8ES
Spark Plug Gap / Torque / Cap Ω	0.7 ~ 0.9mm / 2.5 m-kg / 5K Ω ± 10%
Point Gap / Condenser Capacitance	ϕ / ϕ
TROUBLESHOOTING	
Ignition Coil Test Gap / Primary Ω / Secondary Ω	6mm / 1.0 Ω ± 10% / 5.9K Ω ± 20%
Pulse Coil or Pick-up Coil Color Code / Ω	Wht-Red ~ Blk / 7.8 Ω ± 10% / Wht-Grn ~ Blk / 5.1 Ω ± 10%
Source Coil Color Code / Ω	Lo:Red ~ Blk / 82 Ω ± 10% / Hi:Brn ~ Blk / 305 Ω ± 10%
LIGHTING SYSTEM	
Headlight / Taillight / Signal Rating	6V35-35W / 6V25-5.3W / 6V17W
TROUBLESHOOTING	
Lighting Coil Color Code / Ω	Yel ~ Gnd: 0.23 Ω ± 10%
TORQUE VALUES	
Front Axle Nut	14 x 1.5: 7.8 m-kg
Front Axle Holder Nut	ϕ
Rear Axle Nut	16 x 1.5: 8.8 m-kg
Rear Axle Pinch Bolt	
Clutch Nut	20 x 1.0: 7.5 m-kg (Use Lock Washer)
Drain Plug	12 x 1.5: 2.5 m-kg
Cylinder Head Cover	ϕ
Cylinder Head:	Nut 8 x 1.25: 2.5 m-kg
	Stud 8 x 1.25: 2.5 m-kg
Engine Mounting Bolts: Front, Upper	8 x 1.25: 2.5 m-kg
Front, Lower	8 x 1.25: 2.5 m-kg
Rear, Upper	8 x 1.25: 2.5 m-kg
Rear, Lower	10 x 1.25: 4.0 m-kg

ϕ Does Not Apply to This Model

* Available From Yamaha Parts Distributors, Inc.

YAMAHA MOTORCYCLE PARTS & ACCESSORIES

Click on links below

Yamaha DT80 Original Equipment Parts & Complete Online Diagrams

Yamaha D100 Original Equipment Parts & Complete Online Diagrams

Yamaha DT125 Original Equipment Parts & Complete Online Diagrams

Yamaha DT175 Original Equipment Parts & Complete Online Diagrams

Yamaha DT250 Original Equipment Parts & Complete Online Diagrams

Yamaha DT360 Original Equipment Parts & Complete Online Diagrams

Yamaha DT400 Original Equipment Parts & Complete Online Diagrams

Yamaha DT Series Model History & Technical Specifications

Motorcycle Helmet Closeout Sale

Yamaha Motorcycle Parts & Accessories

Yamaha Dirt Bike Parts & Accessories

Save On All Motorcycle Tires

Motorcycle Gear Closeout Sale

High Visibility Motorcycle Gear

Cycle Gear – Free Shipping

Free Shipping On All Motorcycles

Discount Auto Parts – Free Shipping